# ®WEDICO ASSEMBLY INSTRUCTION

## Complete Kit Peterbilt
### Driving model "C"

*Art.- No. 41 white*
*Art.- No. 42 black*
*Art.- No. 43 green*

**Technical data:**

**Truck tractor:**
*Length.....610 mm*
*Width.....185 mm*
*Height.....265 mm*
*Track (tread) front.....140 mm*
*Track (tread) rear .....116 mm*
*Weight with motor drive and NiCads.....4.1 kg*

**Superstructure:**
*Components of die cast aluminium*
*and aluminium sheet,*
*stainless steel threaded connectors and*
*bending wire components,*
*high impact plastic components.*
*Hood tiltable.*
*Model is prepared for RC-installation.*

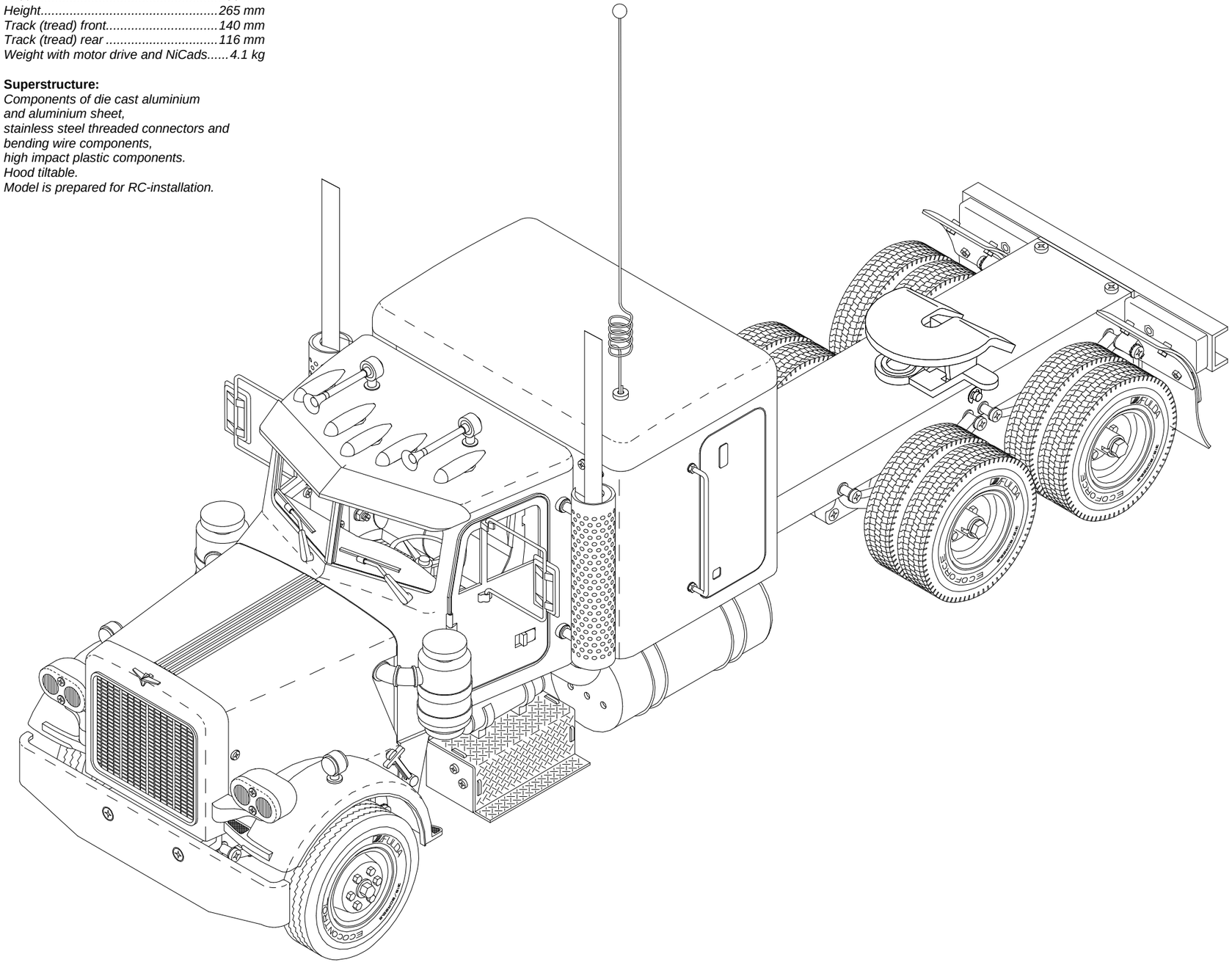


B-41-0

**Technical data**

| | |
|---|---|
| **Drive** | Motor: WEDICO-Bühler electric motor, rated voltage 12 volts, 7-segment collector. Idling speed 6000 rpm. Torque 5 Ncm (approx. 500 pcm) at 4000 rpm. Power drawn under load at max. torque approx. 3 A. Idling power consumption with connected gearing and one differential approx. 0.5 A. |
| **Gearbox** | Standard single speed 2-stage spur gearbox with self-lubricating gearwheels. Reinforced housing. Gear ratio 5.6 : 1. |
| **Power transmission** | Stainless steel drive shafts with ball joints between gearbox and differential. Differential gear. Gear ratio 2 : 1. |
| **Superstructure** | Frame made of aluminium section, 2 mm thick; torsion resistant. Rear bumper made of section 2 mm thick. 3-part (rear) to 4-part (front) stainless steel leaf spring packages on all axles. Soft rubber tires with reproduction of original tread pattern. Fastening components made of stainless steel. All body parts are made from aluminium sheet and aluminium die cast 1.5 to 2 mm thick. |
| **Finish** | Extremely hard epoxy powder coating. Excellent base when repainting for special purposes. |
| **Assembly** | During assembly it is advisable following the sequence given by these instructions. Observe the notes explaining the various steps in assembly and use only those parts which are provided; this will insure a correct result of assembly. WEDICO system kits are known for their exact fit. |

We are glad that you have decided on one of the precious WEDICO truck models! For the manufacture of individual parts WEDICO uses durable materials of high quality - rarely to find in these days. This guarantees durability and enjoyment of your model for years to come.

If you should ever require **replacement parts**, please get in touch with your dealer or directly with WEDICO. For order purpose it is important using not only those **EDP-numbers** mentioned within the general parts list (see last page of this instruction) but also indicating the necessary details concerning colour, quantity and exact term of the spares required. You may be assured that WEDICO will supply the replacement part as quick as possible.

Screws and other small parts at 1:1 **ill. 1**

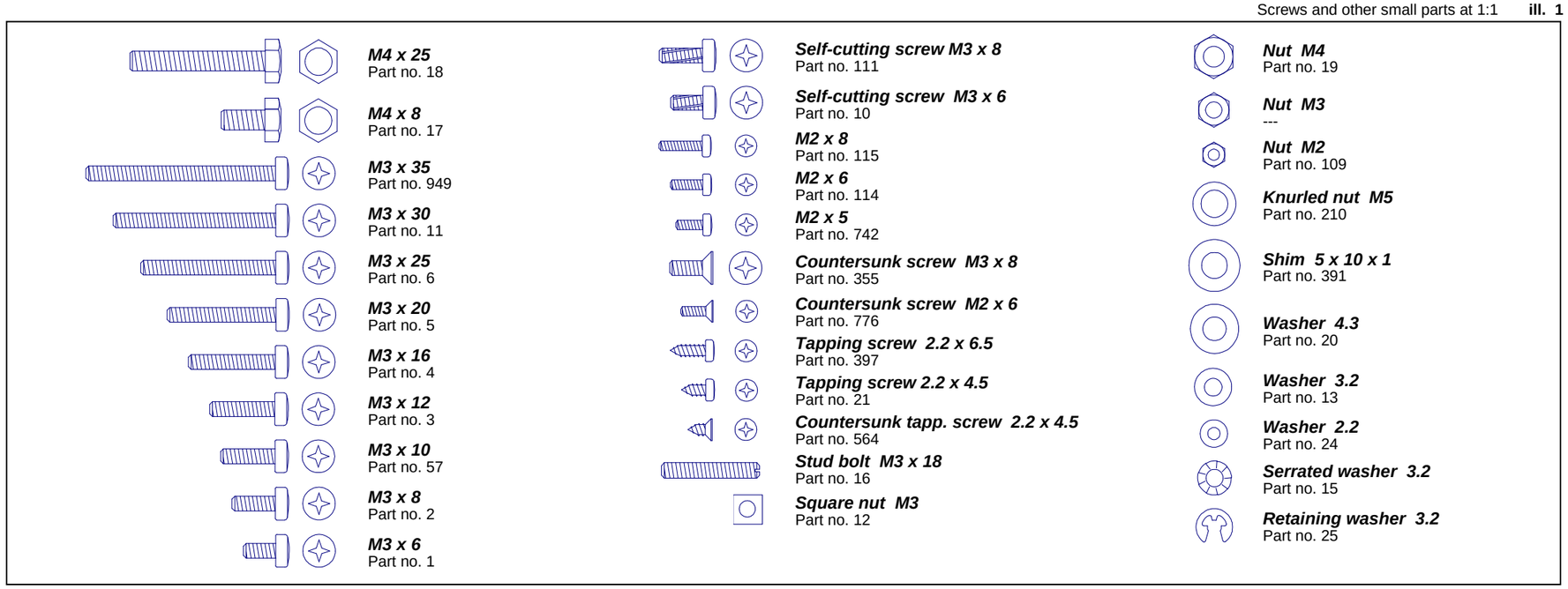


# 1 General

### 1.1 The assembly instruction

On the left side you find the illustrations of the assembly groups including the part lists indicating the necessary components. On the right side, marked by the corresponding number of illustration, the instructions for the proper assembly..

### 1.2 Screws and other small parts

M3 nuts are generally not provided with an identification number. As a help easier to find out screws and small parts, please see ill. 1 which is showing you the most important components at original size.

Assembly of the hood **ill. 2**

| Qty. | No. | Assembly part | Qty. | No. | Assembly part |
|---|---|---|---|---|---|
| 8 | --- | Nut M3 | 6 | **713** | Bulb 3V |
| 6 | **2** | Screw M3 x 8 | 2 | **811** | Headlight frame, chromed |
| 8 | **15** | Serrated washer 3.2 | | | |
| 2 | **24** | Washer 2.2 | 1 | **812** | Headlight -lh-, chromed |
| 2 | **57** | Screw M3 x 10 | 1 | **813** | Headlight -rh-, chromed |
| 1 | **91** | Radiator grille Conv. Truck | 1 | **814** | Radiator Peterbilt, polished |
| 2 | **109** | Nut M2 | 2 | **815** | Locking plate, radiator |
| 4 | **114** | Screw M2 x 6 | 2 | **816** | Wedge washer, radiator |
| 2 | **115** | Screw M2 x 8 | 1 | **817** | Fender -lh-, Peterbilt |
| 2 | **210** | Knurled nut M5 | 1 | **818** | Fender -rh-, Peterbilt |
| 2 | **291** | Headlight lens, Freightl. | 1 | **819** | Hood Peterbilt |
| 2 | **711** | Blinker case Conv. Truck | 1 | **853** | Spring for speaker ∅1 x 73 |
| 4 | **712** | Blinker lens flat, orange | | | |

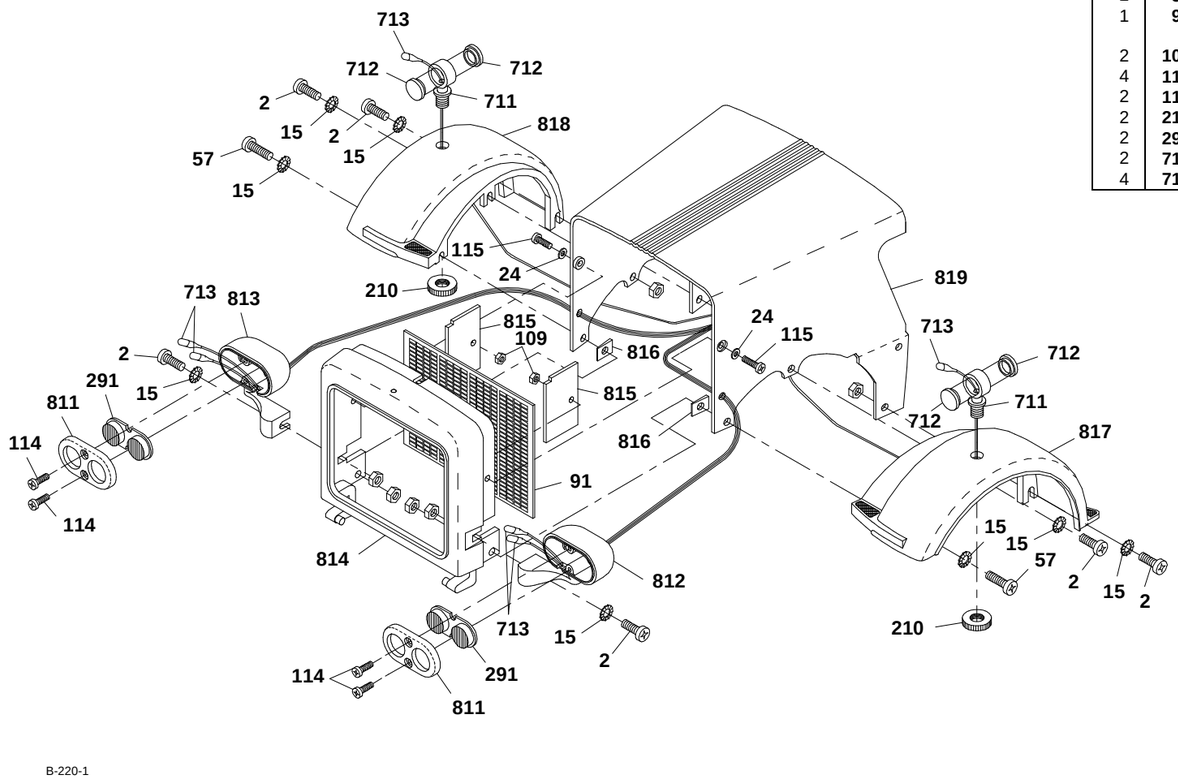


**Attachment of the speaker**

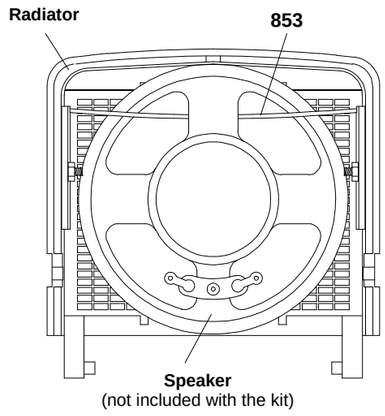


# 2 Assembly of the hood

First insert the bulbs **713** into the blinker housings and headlights. Press the blinker lenses **712** on both sides into the blinker cases **711** and then fix the blinkers with knurled nuts **210** onto the fenders. Into the head light cases **812** and **813** lay the lenses **291**, and afterwards fix the headlight frames **811** with screws **114** onto the head lights.

Mount the fenders **817** and **818** with each two screws **2**, serrated washers **15** and nuts M3 onto the hood **819**. Slide then the hood onto the radiator and fix it using screws **57**, serrated washers **15**, wedge washers **816** and nuts M3. Lay the radiator grille **91** from inside into the radiator and lock it with locking plates **815**, screws **115**, washers **24** and nuts **109**.

➔ ***When installing the Diesel Engine Sound, Art.-No. 193:*** Attach the included speaker to the radiator with the spring wire **853**. Carefully slide the wire underneath one of the speaker struts, lay the speaker inside against the radiator grille and press the ends of the spring wire under the recesses of the support for the radiator grille.

Now attach the head lights with screws **2**, serrated washers **15** and nuts M3. Lead the bulb through the holes of the hood.

Assembly of the doors **ill. 3**

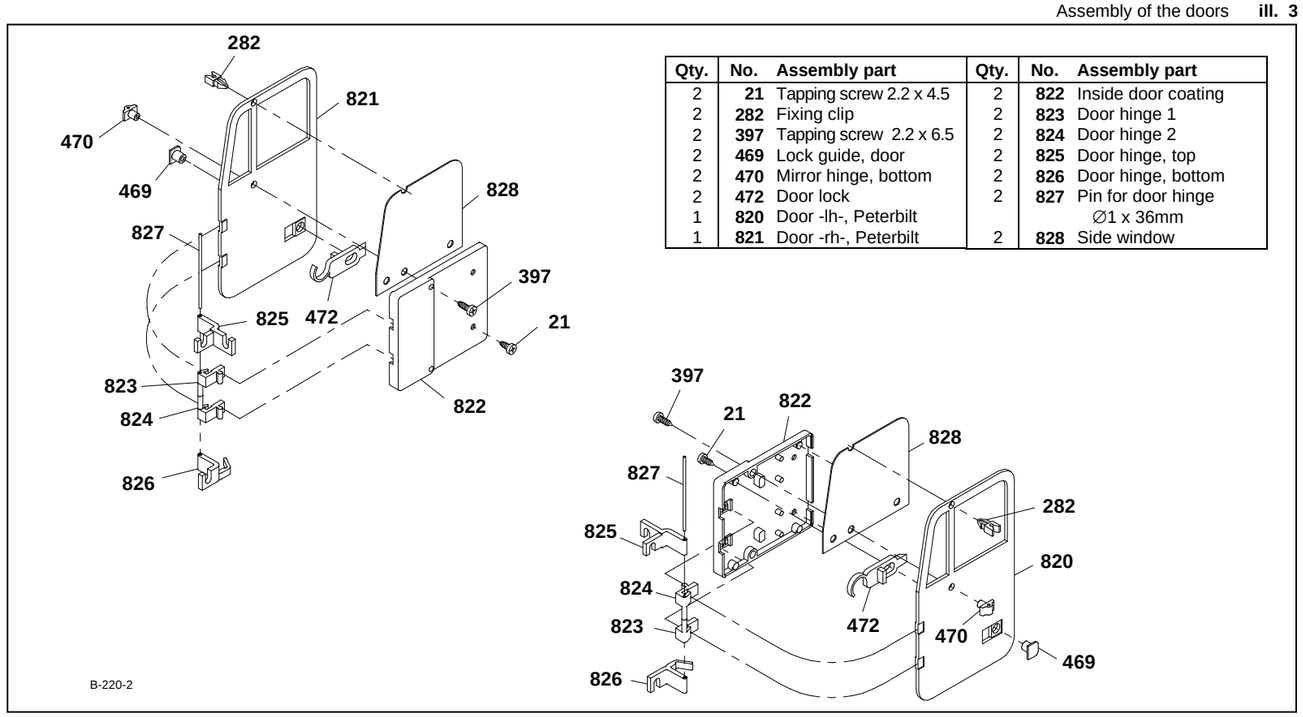


| Qty. | No. | Assembly part | Qty. | No. | Assembly part |
|---|---|---|---|---|---|
| 2 | **21** | Tapping screw 2.2 x 4.5 | 2 | **822** | Inside door coating |
| 2 | **282** | Fixing clip | 2 | **823** | Door hinge 1 |
| 2 | **397** | Tapping screw 2.2 x 6.5 | 2 | **824** | Door hinge 2 |
| 2 | **469** | Lock guide, door | 2 | **825** | Door hinge, top |
| 2 | **470** | Mirror hinge, bottom | 2 | **826** | Door hinge, bottom |
| 2 | **472** | Door lock | 2 | **827** | Pin for door hinge ∅1 x 36mm |
| 1 | **820** | Door -lh-, Peterbilt | | | |
| 1 | **821** | Door -rh-, Peterbilt | 2 | **828** | Side window |

Attachment of the doors onto the front panels **ill. 4**

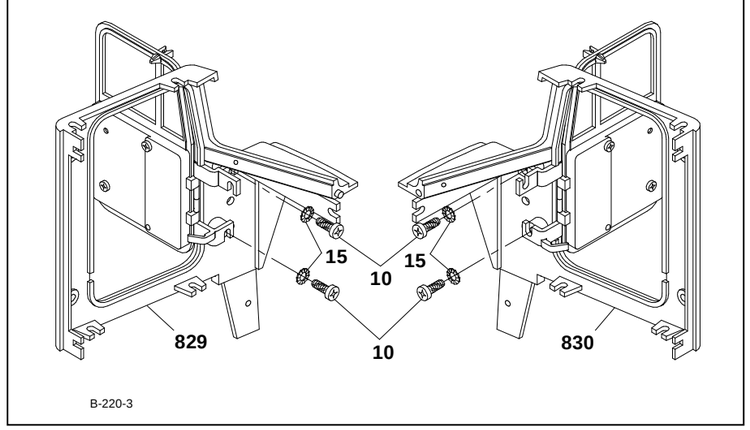


| Qty. | No. | Assembly part | Qty. | No. | Assembly part |
|---|---|---|---|---|---|
| 4 | **10** | Self-cutting screw M3 x 6 | 1 | **829** | Front panel -lh-, Peterb. |
| 4 | **15** | Serrated washer 3.2 | 1 | **830** | Front panel -rh-, Peterb. |

Finishing of the front units **ill. 5**

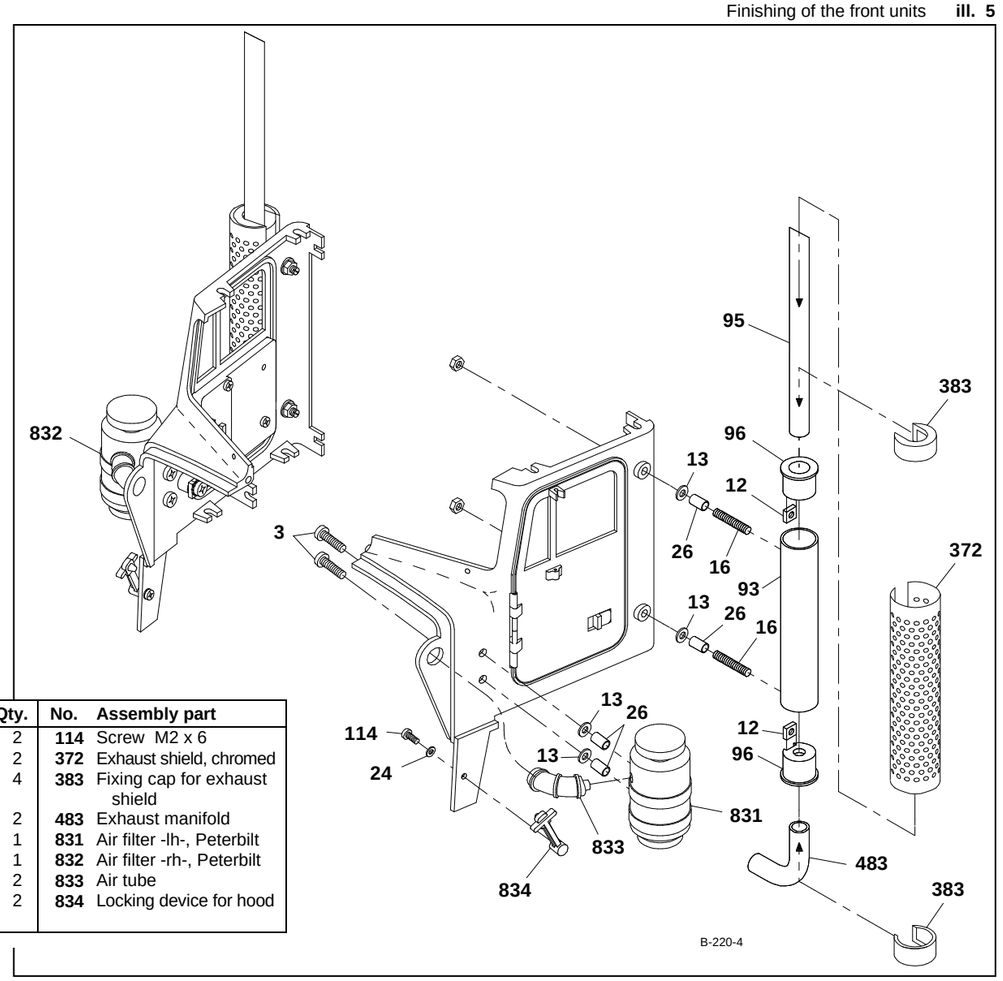


| Qty. | No. | Assembly part | Qty. | No. | Assembly part |
|---|---|---|---|---|---|
| 4 | **---** | Nut M3 | 2 | **114** | Screw M2 x 6 |
| 4 | **3** | Screw M3 x 12 | 2 | **372** | Exhaust shield, chromed |
| 4 | **12** | Square nut M3 | 4 | **383** | Fixing cap for exhaust shield |
| 8 | **13** | Washer 3.2 | | | |
| 4 | **16** | Stud bolt M3 x 18 | 2 | **483** | Exhaust manifold |
| 2 | **24** | Washer 2.2 | 1 | **831** | Air filter -lh-, Peterbilt |
| 8 | **26** | Bushing 4 x 0.5 x 7 | 1 | **832** | Air filter -rh-, Peterbilt |
| 2 | **93** | Muffler 80mm | 2 | **833** | Air tube |
| 2 | **95** | Exhaust tail pipe | 2 | **834** | Locking device for hood |
| 4 | **96** | Exhaust cap | | | |

## 3 Assembly of the doors

Start assembling the door hinges. For this purpose press the pins **827** into the holes of the door hinges **825**, **823**, **824** and **826**. Please note the different sequence on the left and the right side. Then lay the noses of the door hinges **823** and **824** into the clamping device of the inside door coating **822**.

Press both outer holes of the side windows **828** (remove first the foil on both sides) onto the pins of the inside door coating. Then lay the door lock **472** into the inside door coating, press the mirror support **470** into the holes of the doors **820** and **821** as well as into the holes of the side windows and the inside door coating. Tighten the mirror supports using screws **21**. Lay as well the lock guides **469** into the recessed door holes and the door locks and fix them with screws **21**. Finally press the clips **282** into the upper bores of the doors; the side windows are thereby additionally fixed.

## 4 Attachment of the doors onto the front panels

Prepare both front panels **829** and **830** for the attachment of the doors. For this purpose cut with one of the self-cutting screws **10** threadings into the bores of the front panels (use some grease or vaseline). Now lay the prepared doors from outside onto the door frames of the front panels and fix the door hinges with screws **10** and serrated washers **15** onto the front panels. It is important to adjust the doors before you finally tighten them. The additional fixing points of the upper door hinges serve for mounting the dashboard.

## 5 Finishing of the front units

### 5.1 Air filter

Press both air tubes **833** into the holes of the air filters **831** and **832**. Then add the air filters onto the front units with bushings **26**, washers **13** and screws **3**. Now press the air tubes into the holes of the front units.

### 5.2 Exhaust system

For the attachment of the exhaust system slide each one square nut **12** into the recesses of the exhaust caps **96**. Slide then the exhaust caps that way into the mufflers **93** that the square nuts lay behind the holes. From top insert the exhaust tail pipes **95** that way that the point shows frontwards when adding the exhaust system to the front units. Press the exhaust tail pipes into the exhaust caps until they catch, then clamp them using studs **16**. By the same way add the exhaust manifolds **483** (the longer side of the manifold has to be fixed inside the exhaust cap **96**).

Afterwards slide each one bushing **26** and one washer **13** onto the studs. With the studs insert the exhaust systems laterally through the rear holes of the front units; then fix them with nuts M3. Slide the exhaust shields **372** over the mufflers **93**, insert the fixing caps **383** and clamp the shields on. One may even increase the wedging effect of the shields by careful squeezing.

### 5.3 Locks for the hood

Now use screws **114** and washers **24** to attach both locking devices **834** onto the lower shields of the front units.

Roof section **ill. 6**

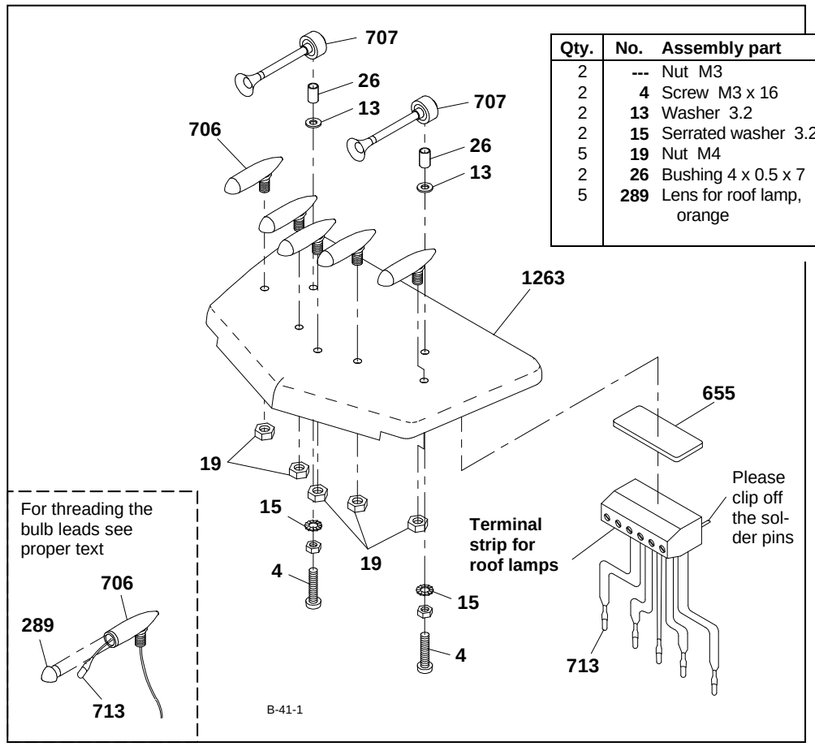


| Qty. | No. | Assembly part | Qty. | No. | Assembly part |
|---|---|---|---|---|---|
| 2 | --- | Nut M3 | 1 | 655 | Adhesive pad, double-sided |
| 2 | 4 | Screw M3 x 16 | 5 | 706 | Roof lamp, chromed |
| 2 | 13 | Washer 3.2 | 2 | 707 | Horn |
| 2 | 15 | Serrated washer 3.2 | 5 | 713 | Bulb 3V |
| 5 | 19 | Nut M4 | 1 | 1263 | Cab roof, Compl. kit Peterbilt "C" |
| 2 | 26 | Bushing 4 x 0.5 x 7 | 1 | --- | Terminal strip for roof lamps, 6-pole |
| 5 | 289 | Lens for roof lamp, orange | | | |

Attachment of the seats onto the floor plate **ill. 7**

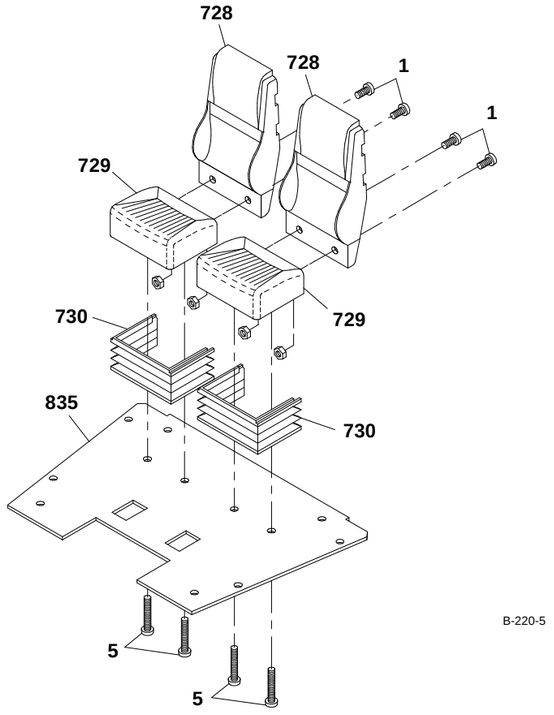


| Qty. | No. | Assembly part | Qty. | No. | Assembly part |
|---|---|---|---|---|---|
| 4 | --- | Nut M3 | 2 | 729 | Socket, bucket seat |
| 4 | 1 | Screw M3 x 6 | 2 | 730 | Foot, bucket seat |
| 4 | 5 | Screw M3 x 20 | 1 | 835 | Floor plate, Peterbilt |
| 2 | 728 | Back, bucket seat | | | |

Assembly of the cab **ill. 8**

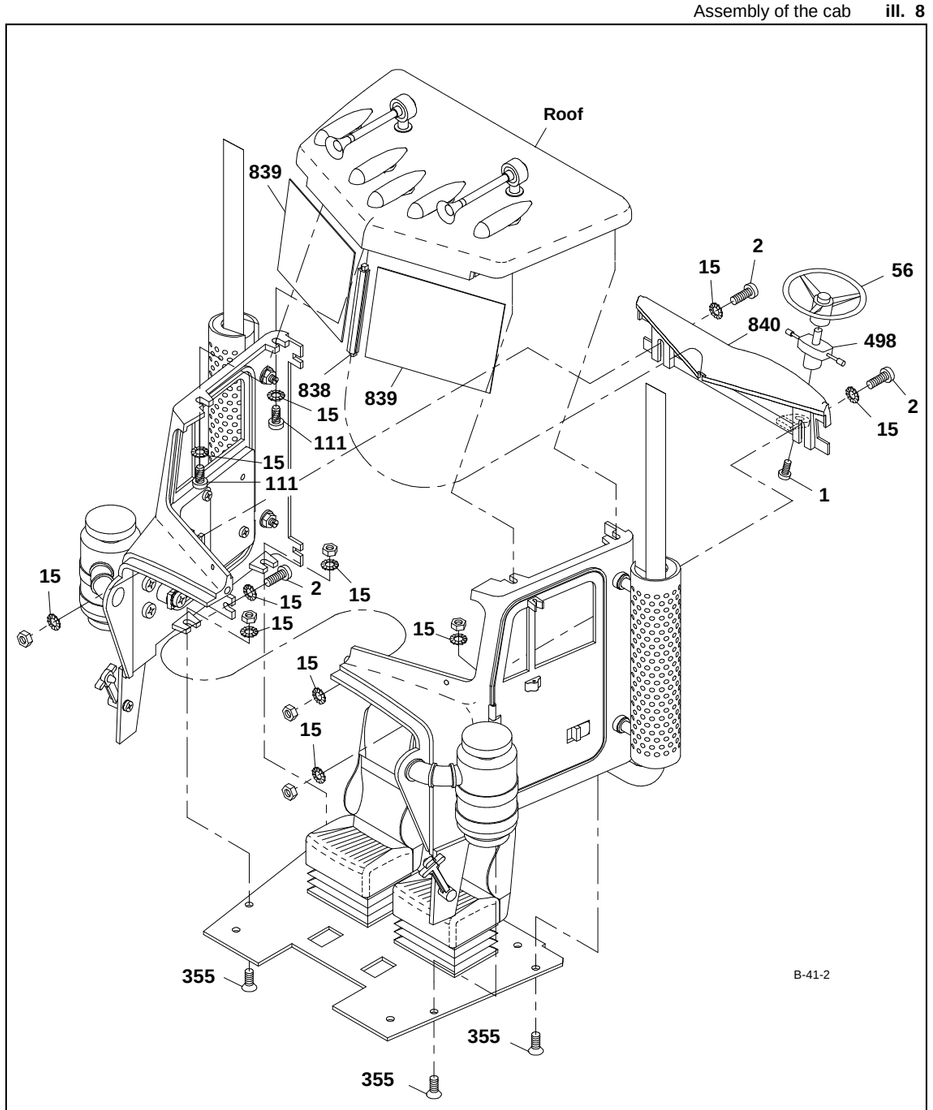


| Qty. | No. | Assembly part | Qty. | No. | Assembly part |
|---|---|---|---|---|---|
| 7 | --- | Nut M3 | 4 | 355 | Counters. screw M3 x 8 |
| 1 | 1 | Screw M3 x 6 | 1 | 498 | Switch dashboard |
| 3 | 2 | Screw M3 x 8 | 1 | 838 | Centre strut, windscreen |
| 14 | 15 | Serrated washer 3.2 | 2 | 839 | Windscreen (half) |
| 1 | 56 | Steering wheel | 1 | 840 | Dashboard Peterbilt |
| 4 | 111 | Self-cutting screw M3 x 8 | 1 | 841 | Decal sheet, Peterbilt |

# 6 Roof section

### 6.1 Horns

The horns **707** are fitted with bushings **26** and washers **13** and then affixed, through the holes provided in the roof **1263**, using screws **4**, nuts M3 and serrated washers **15**.

### 6.2 Roof lamps

Install a bulb **713** in each of the roof lamps **706**, threading the leads through the lamp housings first. The cables are easier to thread if you twist the two conductors together and bend the ends slightly. Pointed tweezers can help in pulling the cable through. Do not pull the bulbs too far into the lamp housings; the bulbs should protrude by 2 to 3 mm. After the roof lamp lenses **289** have been pressed onto the lamp housings, the housings are inserted in the holes in the roof and secured with nuts **19**.

The bulb leads and the red/black cable from the switch panel are attached to the terminal strip - see Section 23.3 and ill. 23. Use adhesive pads **655** to affix the terminal strip under the roof so that the cables are not visible inside the cab.

# 7 Attachment of the seats onto the floor plate

Fix the seat backs **728** with screws **1** and nuts M3 onto the seat sockets **729**. Then press the swing seats **730** onto the seat sockets and fix the complete seat units with screws **5** onto the floor plate **835**..

# 8 Assembly of the cab

Lay the right and the left front units together and fix them with each other underneath the windows with screws **2**, two serrated washers **15** and nuts M3. Lay then the roof **837** onto both front units and screw it up with four screws **111** and serrated washers **15**. Make sure that along the full line the distance between roof and front parts has to be the same. Afterwards set the floor plate from underneath onto the front parts and fix it with countersunk screws **355**, serrated washers **15** and nuts M3.

Pin the centre strut **838** from underneath into the recess of the roof and lay the centre strut with the inclined sides against the front parts. Lay both front screens **839** into the lateral groove of the centre strut as well as into the left and the right groove of the roof. Make sure that the screens catch the projected rest of the front units.

Take now the steering wheel **56** and press it onto the pin of the switch **498**. The proper switch has then to be fixed onto the dashboard with screw **1**. Remove the decals from their sheet **841** and apply them on the left and right side of the dashboard. Lay then the dashboard from inside against the front parts and fix it onto the door hinges with screws **2**, serrated washers **15** and nuts M3. When correctly assembled, the fore edge of the dashboard presses the centre strut and the front screens against the front units.

View from below showing the location of components mounted onto the frame **ill. 9**

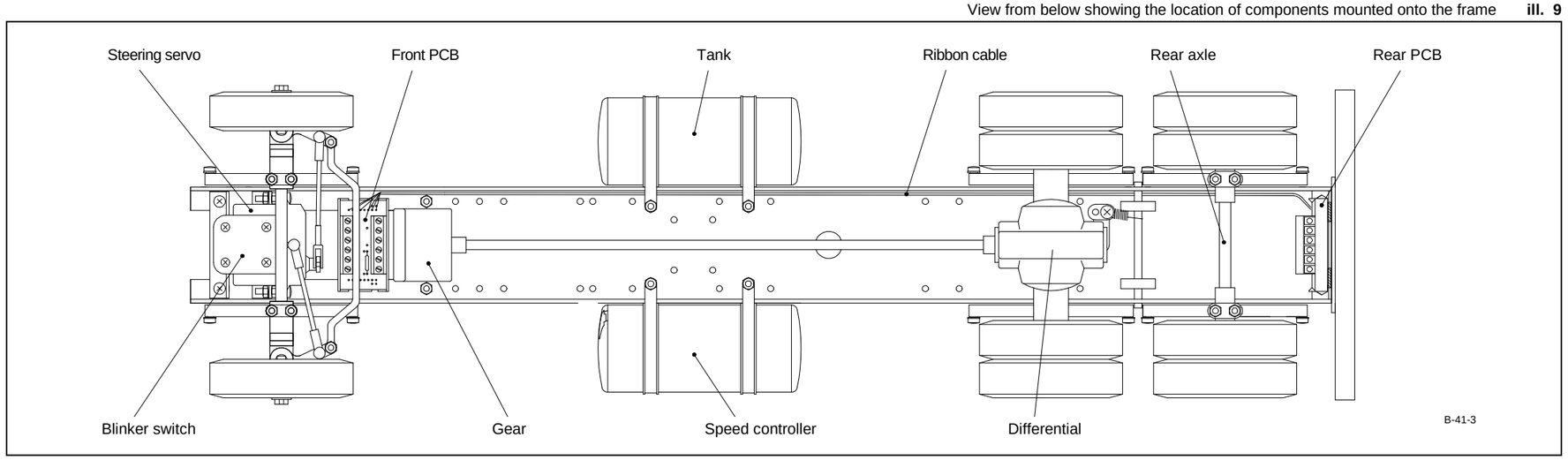


## 9 Preview of the electrical system installation

The illustration at the left shows the locations of the PCBs and the routing of the ribbon cable beneath the frame. The cable will have to be installed underneath the frame before the electrical devices are installed in their entirety. The cable should run between the frame and the axles, the fifth-wheel shaft and the screws used to affix the tank. If the cable were to be laid later it would be necessary to disassemble some components already installed.

The best course of action is to read all the information on the electrical system in **Chapter 23** before you begin assembling the components on the frame. This will give you an idea of which components will be connected by cable.

Front axle section **ill. 10**

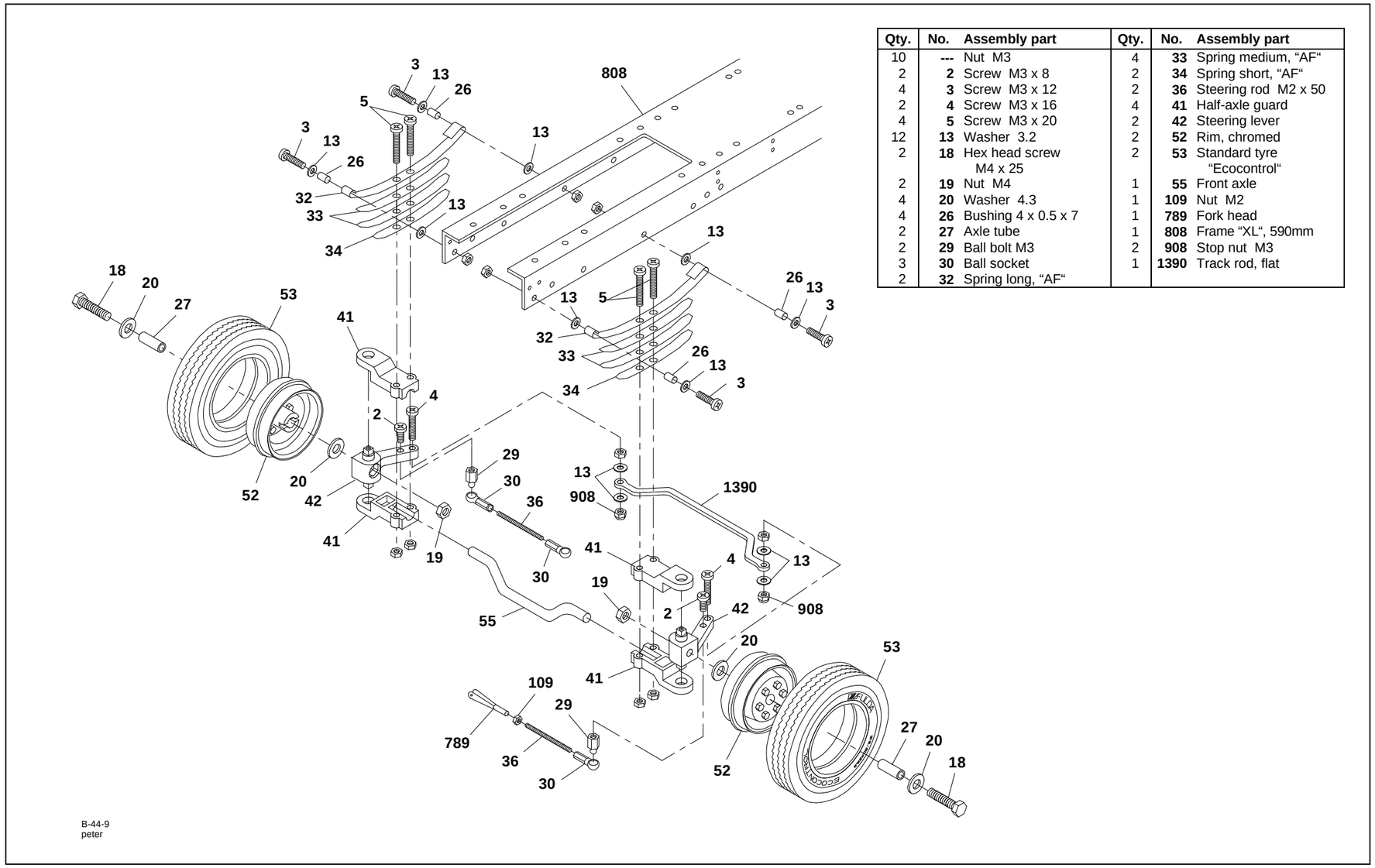


| Qty. | No. | Assembly part | Qty. | No. | Assembly part |
|---|---|---|---|---|---|
| 10 | --- | Nut M3 | 4 | **33** | Spring medium, “AF“ |
| 2 | **2** | Screw M3 x 8 | 2 | **34** | Spring short, “AF“ |
| 4 | **3** | Screw M3 x 12 | 2 | **36** | Steering rod M2 x 50 |
| 2 | **4** | Screw M3 x 16 | 4 | **41** | Half-axle guard |
| 4 | **5** | Screw M3 x 20 | 2 | **42** | Steering lever |
| 12 | **13** | Washer 3.2 | 2 | **52** | Rim, chromed |
| 2 | **18** | Hex head screw M4 x 25 | 2 | **53** | Standard tyre “Ecocontrol“ |
| 2 | **19** | Nut M4 | 1 | **55** | Front axle |
| 4 | **20** | Washer 4.3 | 1 | **109** | Nut M2 |
| 4 | **26** | Bushing 4 x 0.5 x 7 | 1 | **789** | Fork head |
| 2 | **27** | Axle tube | 1 | **808** | Frame “XL“, 590mm |
| 2 | **29** | Ball bolt M3 | 2 | **908** | Stop nut M3 |
| 3 | **30** | Ball socket | 1 | **1390** | Track rod, flat |
| 2 | **32** | Spring long, “AF“ | | | |

## 10 Front axle section

### 10.1 Mounting the suspension with front axle

First install the screws **3** together with washers **13**, bushings **26**, and M3 nuts at the rearward holes in the frame, provided for attaching the springs. Then attach the open ends of the two long spring leaves **32** at the bushings and use an identical set of parts to screw the closed ends to the front of the frame **45**. One nut **19** each is pressed into the hexagonal depressions at the steering lever **42**. Use two screws **5** and M3 nuts to attach to the long spring leafs, previously mounted, two medium spring leaves **33** and a short spring leaf **34** along with two half-axle guards **41**, into which the front axle **55** and steering lever **42** have been inserted.

☝ Before tightening down the screws **5** ensure that the spring sets are not under tension and can move freely.

### 10.2 Mounting the wheels and steering linkage

First mount the standard tyres **53** on the rims **52**. Then use screws **18** and one washer **20** each in front of and behind the axle tube **27** located in the hub to bolt the wheels to the steering lever, using the nut already inserted. To the outer holes on the steering levers fix two screws **4** along with nuts M3. To this unit add now the track rod **1390** using washers **13** and stop nuts **908**; do not tighten the stop nuts but leave the track rod moveable.

With screws **2** fix two ball bolts **29** to the inner holes on the steering levers for the attachment of the steering rods. To a steering rod **36** add one nut **109**, fork head **789** and ball socket **30**. The steering rod has to be bent slightly, depending on the size of the servo unit. Afterwards clip this steering rod for the servo linking to the left-hand ball bolt. For operation of the blinker switch, add to the right-hand ball bolt another steering rod **36**, equipped with two ball sockets **30**. Adjust the distance between the ball sockets so that the wheels are in the straight-ahead position when the lever of the blinker switch is in its neutral setting.

Components attached to the rear frame section **ill. 11**

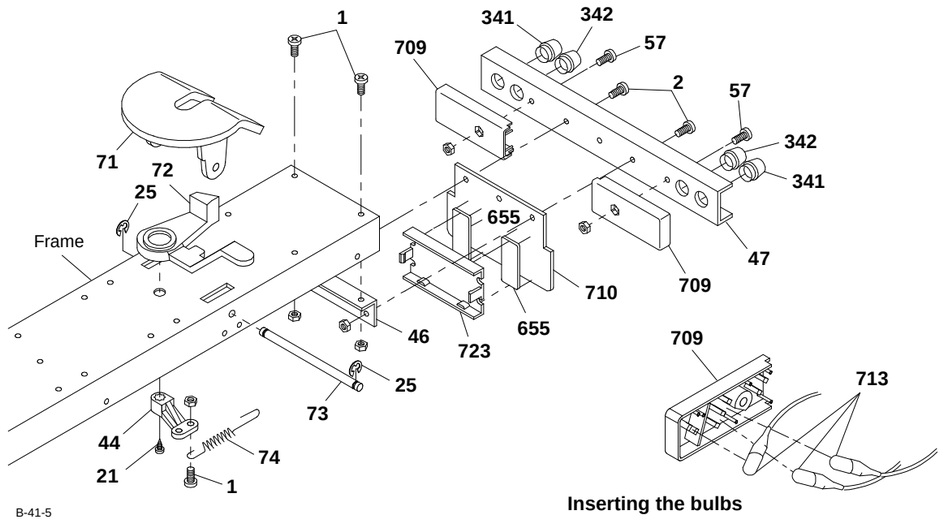


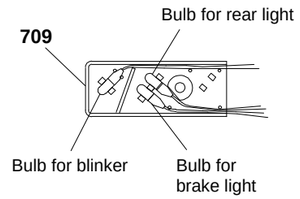


**Inserting the bulbs**

| Qty. | No. | Assembly part | Qty. | No. | Assembly part |
|---|---|---|---|---|---|
| 7 | --- | Nut M3 | 1 | **73** | Shaft for fifthwheel |
| 3 | **1** | Screw M3 x 6 | 1 | **74** | Draw spring |
| 2 | **2** | Screw M3 x 8 | 2 | **341** | Blinker lens high, orange |
| 1 | **21** | Tapping screw 2.2 x 4.5 | 4 | **342** | Lens/rear light high, red |
| 2 | **25** | Retaining washer 3.2 | 2 | **655** | Adhesive pad, double-sided |
| 1 | **44** | Link lever | 2 | **709** | Lamp cap |
| 1 | **46** | Frame tail piece | 1 | **710** | Carrier plate for support PCB |
| 1 | **47** | Bumper, rear | 6 | **713** | Bulb 3V |
| 2 | **57** | Screw M3 x 10 | 1 | **723** | PCB support, small |
| 1 | **71** | Standard fifthwheel | | | |
| 1 | **72** | Bar for kingpin | | | |

**Note!**
The kit contains two additional red lenses **342** for the US chassis version equipped with red blinkers.

Rear axle section **ill. 12**

**For a better overview the illustration is showing an assembly without rear bumper and fifth-wheel**

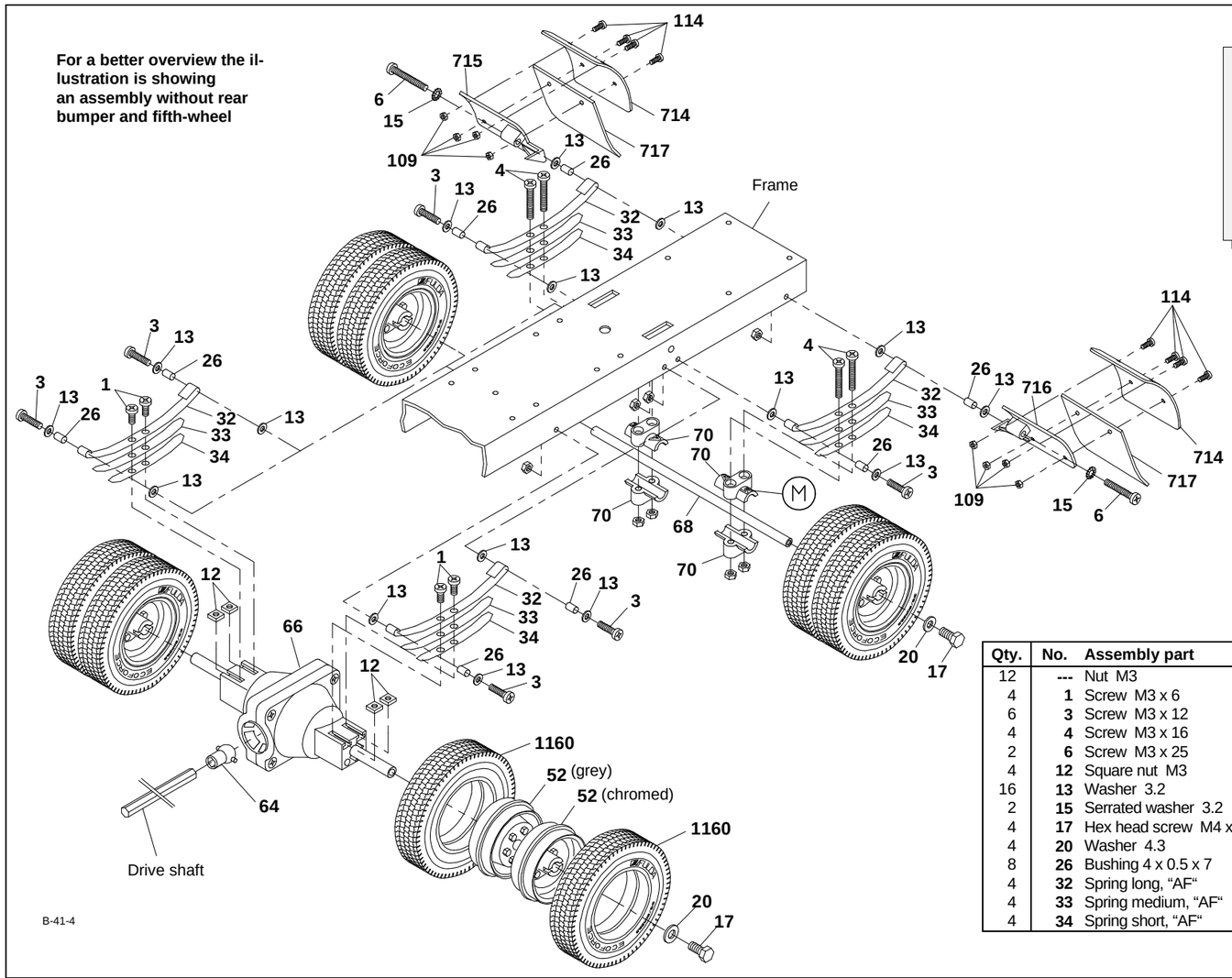


**Note!**
Sometimes it happens that the chromed rims sit too tightly on the axle (work tolerance); in this case remove a bit the chrome inside the rims, and lightly grease the running surface (e.g. using Vaseline).

| Qty. | No. | Assembly part | Qty. | No. | Assembly part |
|---|---|---|---|---|---|
| 12 | --- | Nut M3 | 4 | **52** | Rim, grey |
| 4 | **1** | Screw M3 x 6 | 4 | **52** | Rim, chromed |
| 6 | **3** | Screw M3 x 12 | 1 | **64** | Ball joint |
| 4 | **4** | Screw M3 x 16 | 1 | **66** | Standard differential, mounted |
| 2 | **6** | Screw M3 x 25 | | | |
| 4 | **12** | Square nut M3 | 1 | **68** | Rear axle 144mm |
| 16 | **13** | Washer 3.2 | 4 | **70** | Spring carrier, plastic |
| 2 | **15** | Serrated washer 3.2 | 8 | **109** | Nut M2 |
| 4 | **17** | Hex head screw M4 x 8 | 8 | **114** | Screw M2 x 6 |
| 4 | **20** | Washer 4.3 | 2 | **714** | Mud guard |
| 8 | **26** | Bushing 4 x 0.5 x 7 | 1 | **715** | Mudguard support "X" |
| 4 | **32** | Spring long, "AF" | 1 | **716** | Mudguard support "O" |
| 4 | **33** | Spring medium, "AF" | 2 | **717** | Mud flap |
| 4 | **34** | Spring short, "AF" | 8 | **1160** | Drive axle tyre "Ecoforce" |

# 11 Components attached to the rear frame section

### 11.1 Mounting the fifth-wheel components

Attach the spring **74** to the link lever **44** with a screw **1** and M3 nut. Insert the bar **72** into the opening from above, securing it from below with the link lever and a tapping screw **21**. Mount the fifth-wheel **71** from above, inserting the feet into the slots in the frame. Slide the shaft **73** through the holes at the side of the frame and the feet of the fifth-wheel, catching the free end of the spring **74** between the feet when doing so. The shaft is secured with two retaining washers **25**.

☝ Please ensure when attaching the fifth-wheel that the ribbon cable with the two circuit boards is located between the frame and the shaft (ill. 9).

### 11.2 Mounting the rear bumper assembly

First insert the bulbs **713** in the lamp caps **709** as shown in the figure. Now affix the assembled caps to the rear bumper **47** using one each screw **57** and M3 nut. From the rear insert the lenses into the bumper: outwards the blinker lenses **341**, inwards the rear light lenses **342**. Attach the frame tail piece **46** underneath the frame using screws **1** and M3 nuts. Then the bumper and carrier plate **710** are set in front of the frame tail piece and attached with screws **2** and M3 nuts.

☝ Take particular care that the bulb cables are not clamped between the bumper and the frame tail piece; this could cause a short circuit!

Using two adhesive pads **655**, affix the PCB support **723** on the front surface of the carrier plate, centred and flush with the bottom edge.

# 12 Rear axle section

### 12.1 Mounting the mud guards

The mud guard support **715** is marked with an "X" and will later be mounted on the passenger's side, the mud guard support **716** marked "O" on the driver's side. First attach to these supports the mud flaps **717** and the mud guards **714** with four screws **114** and nuts **109** each. Then use screws 6, serrated washers **15**, bushings **26**, two washers **13** and M3 nuts to attach the supports to the holes at the rear of the frame.

### 12.2 Mounting the spring set and axle

Attach the open ends of the two long spring leaves **32** to the bushing and use a screw **3**, bushing **26**, washer **13** and M3 nut to screw the closed end to the frame. Press one each M3 nut into the hexagonal recess at the lower spring carrier **70**. The axle **68** can now be mounted together with the spring carriers, one medium spring leaf **33** each, a short spring leaf **34** and screws **4**.

☝ Ensure that the end of the spring carrier **70** identified with an **"M"** is toward the wheel.

☝ The ribbon cable with the two lamp PCBs should be mounted when attaching the rear axle and the differential!

### 12.3 Mounting the spring set and differential

First attach the long spring leaves **32** to the frame. Once you have inserted one square nut **12** each into the grooves at the side of the differential the springs can be attached with screws **1**. The differential has two cams on the wheel mounts; the grooves in the hubs are aligned exactly with these cams. The wheels are affixed using screws **17** (which will cut their own threads) and washers **20**. Press the joint ball 64 into the joint socket at the mounted differential.

☝ In no case should you use an M3 screw more than 6 mm long to affix the spring set as this would cause binding and damage the shafts on the differential!

### 12.4 Mounting the wheels

Once you have mounted the drive axle tyres **1160** on the rims **52** the wheels are mounted on the shaft, with the wheel nuts facing one another and the chromed rims toward the outside; secure with a washer **20** and a screw **17**. The wheels should turn easily but there should not be too much play.

Stepboard section **ill. 13**

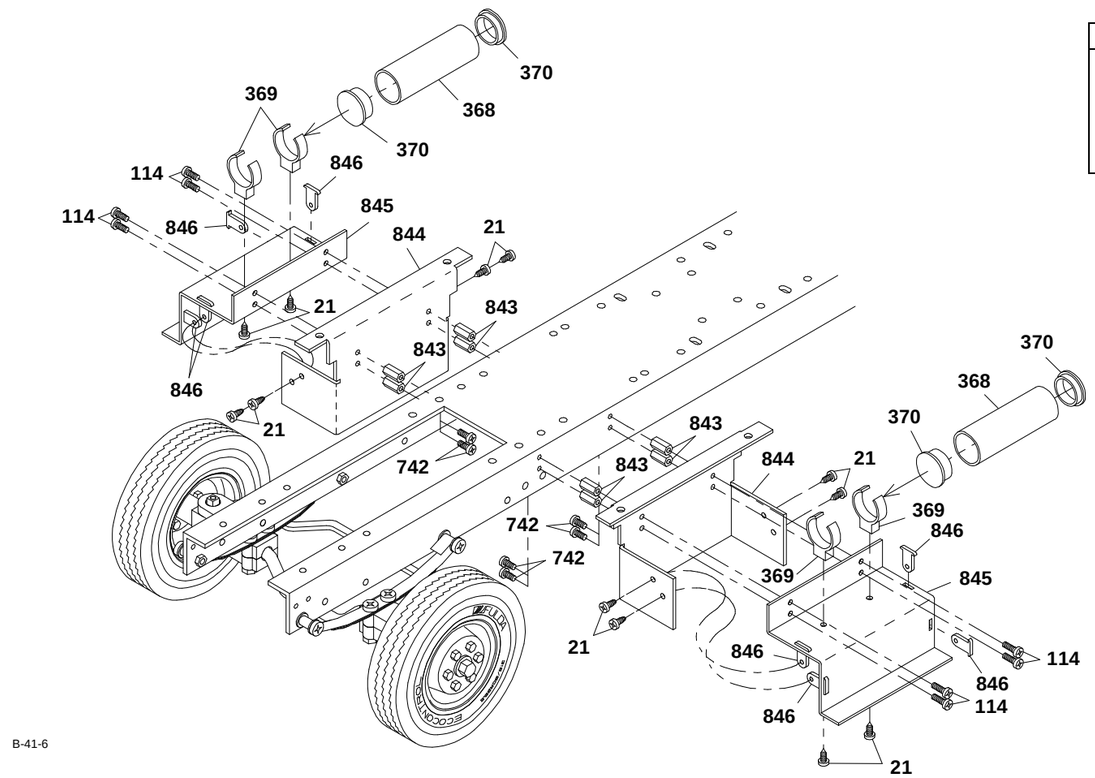


| Qty. | No. | Assembly part | Qty. | No. | Assembly part |
|---|---|---|---|---|---|
| 12 | **21** | Tapping screw 2.2 x 4.5 | 8 | **742** | Screw M2 x 5 |
| 8 | **114** | Screw M2 x 6 | 8 | **843** | Threaded bushing M2 x 8 |
| 2 | **368** | Case for air tank | 2 | **844** | Stepboard Peterbilt |
| 4 | **369** | Bridging clamp for air tank | 2 | **845** | Stepboard plate |
| 4 | **370** | Cover for air tank | 8 | **846** | Connection stepboard plate |

## 13 Stepboard section

First fix the threaded bushings **843** with screws **742** laterally onto the sides of the frame and afterwards screw the bridging clamps **369** with screws **21** onto the stepboard plates **845**. Into their slots pin the plate connections **846**, lay the plates onto the stepboards **844** and fix them with screws **21** onto the stepboards. The right and the left stepboard are then secured with screws **114** onto the threaded bushings. Into the case for air tank **368** press then on both sides each one cover **370** and slide the case into the bridging clamps **369**.

Mounting the motor and gearbox **ill. 14**

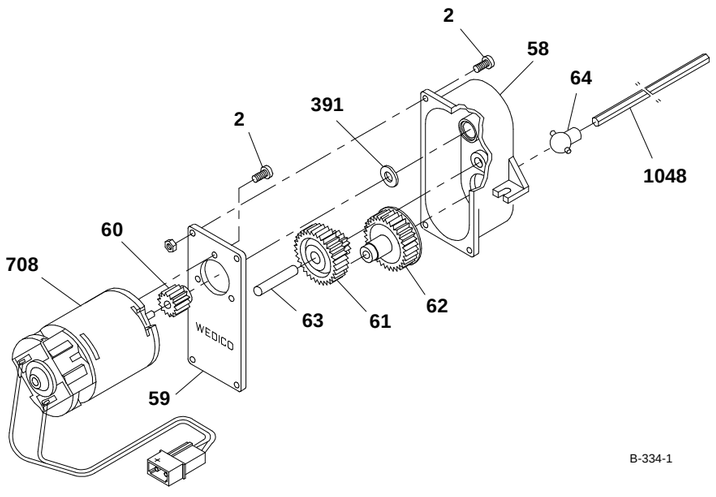


| Qty. | No. | Assembly part | Qty. | No. | Assembly part |
|---|---|---|---|---|---|
| 4 | **---** | Nut M3 | 1 | **62** | Gear wheel with joint socket |
| 7 | **2** | Screw M3 x 8 | | | |
| 1 | **58** | Case for gear 116 | 1 | **63** | Shaft 5 x 24 for gear 116 |
| 1 | **59** | Cap for gear 116 | 1 | **64** | Ball joint |
| (1) | **60** | Motor pinion, white, 14teeth | 1 | **391** | Shim 5 x 10 x 1 |
| 1 | **61** | Double pinion for gear 116 | 1 | **708** | Bühler motor incl. 14 teeth pinion |
| | | | 1 | **1048** | Drive shaft 300mm |

## 14 Mounting the motor and gearbox

Use screws **2** to bolt the gear cover **59** to the motor **708** (we supply the white motor pinion **60** (14t.) already mounted to the motor shaft). Before assembling the gearing lubricate the gears and shafts lightly with Vaseline. Then clip the joint ball **64** in the gear wheel **62**. Lay this gear wheel, the double pinion **61** with shaft **63** and -not to forget!- the shim **391** in the gear housing **58** and use screws **2** and M3 nuts to secure the gear housing to the cover.

Assembling the blinker switch **ill. 15**

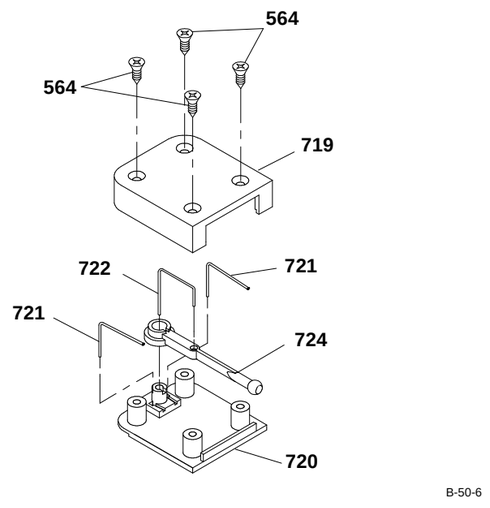


| Qty. | No. | Assembly part | Qty. | No. | Assembly part |
|---|---|---|---|---|---|
| 4 | **564** | Countersunk tapping screw 2.2 x 4.5 | 2 | **721** | Spring, single bent |
| 1 | **719** | Cover for blinker switch | 1 | **722** | Spring, double bent |
| 1 | **720** | Base for blinker switch | 1 | **724** | Lever for blinker switch |

## 15 Assembling the blinker switch

Slide two single-bent springs **721** into the corresponding holes and slots in the base plate **720**. Insert the double-bent spring **722** into the two holes on the lever blinker switch **724** and then place the eye of the lever over the boss on the base plate. The cover plate **719** is now secured to the base plate with countersunk screws **564**.

Installation of drive unit and steerage **ill. 16**

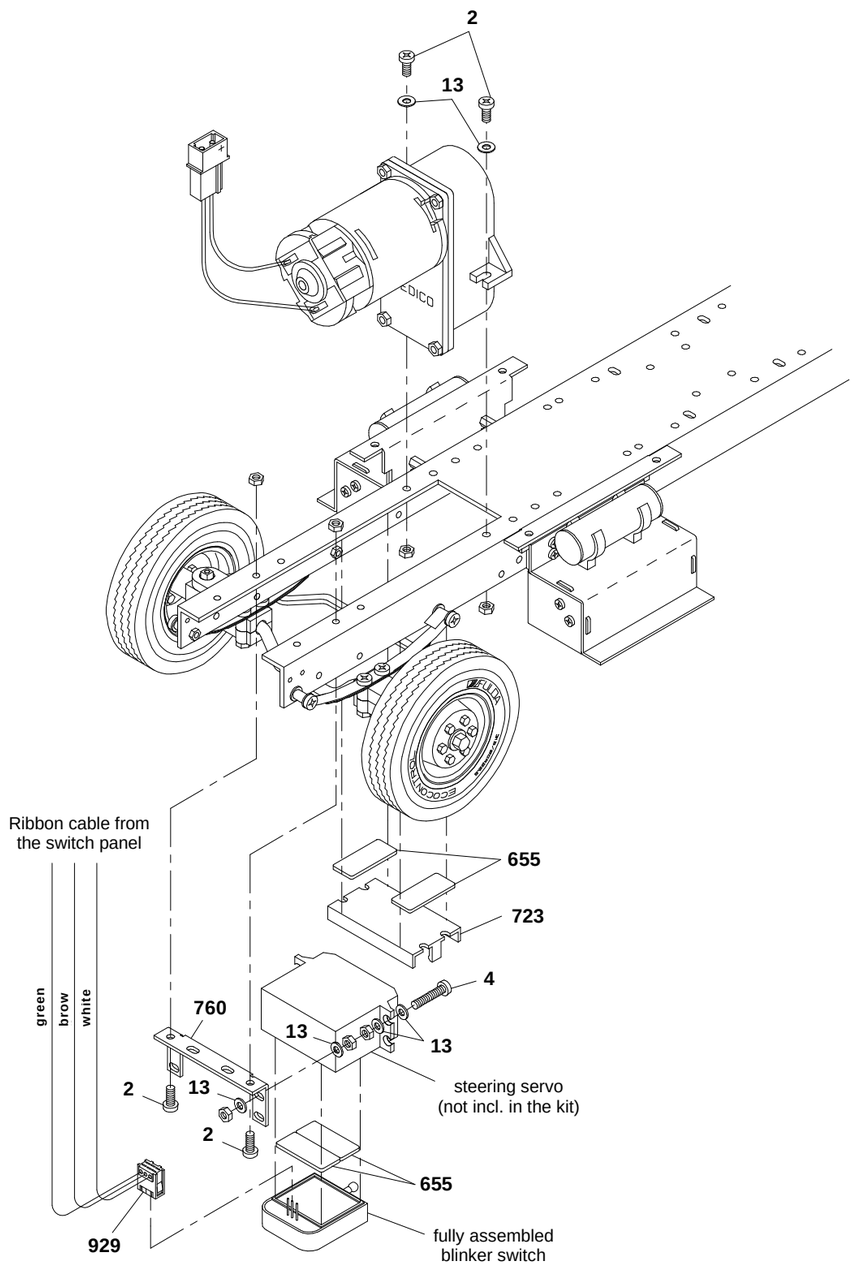


| Qty. | No. | Assembly part | Qty. | No. | Assembly part |
|---|---|---|---|---|---|
| 10 | --- | Nut M3 | 1 | **723** | PCB support, small |
| 4 | **2** | Screw M3 x 8 | 1 | **760** | Servo angle 1, small |
| 2 | **4** | Screw M3 x 16 | 1 | **929** | Clamp-type connector, 3-pole |
| 10 | **13** | Washer 3.2 | | | |
| 2 | **655** | Adhesive pad, double-sided | | | |

**Moment of torsion** of the servo should be at 20 Ncm. The servo supporting angle will fit servos with the following data:
L x W x H: .....41 x 20 x 38 mm
Gauge for screwing .....48 ±2 mm

# 16 Mounting the drive unit and the steerage

### 16.1 Gearbox

Once assembled, the gearbox is inserted from above into the opening in the frame and secured at the sides with screws **2**, washers **13** and M3 nuts. At the same time the drive shaft **1048** (see ill. 15) is inserted at the joint balls between the gearbox and the differential.

### 16.2 Mounting the servo unit

Start by screwing on the servo supporting angle **760** underneath to the frame; for this purpose use screws **2** and nuts M3. Accordingly to the drawing add now two screws **4** with washers **13** and nuts M3 to the steering servo. Finally use washers **13** and nuts M3 to fix the complete unit onto the servo supporting angle.

### 16.3 Mounting the PCB support

Use two adhesive pads **655** to affix the PCB support **723** in front of the gearbox under the frame.

### 16.4 Attaching the blinker switch

Attach the blinker switch with two adhesive pads **655** that way onto the steering servo, that the clamp-type connector **929** lays in front of the vertical leg of the frame tail piece (please refer to point 18.2).

Assembly of the cab rear panel **ill. 17**

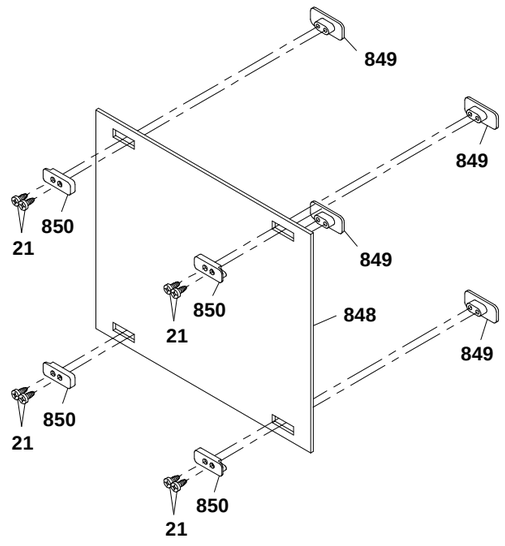


| Qty. | No. | Assembly part | Qty. | No. | Assembly part |
|---|---|---|---|---|---|
| 8 | **21** | Tapping screw 2.2 x 4.5 | 4 | **849** | Bar (outside), rear panel |
| 1 | **848** | Rear panel, Peterbilt | 4 | **850** | Bar (inside), rear panel |

# 17 Assembly of the cab rear panel

Into the four slots of the rear panel **848** lay each one bar **849**. From inside press onto these outer bars each one bar **850**; fix them with screws **21**.

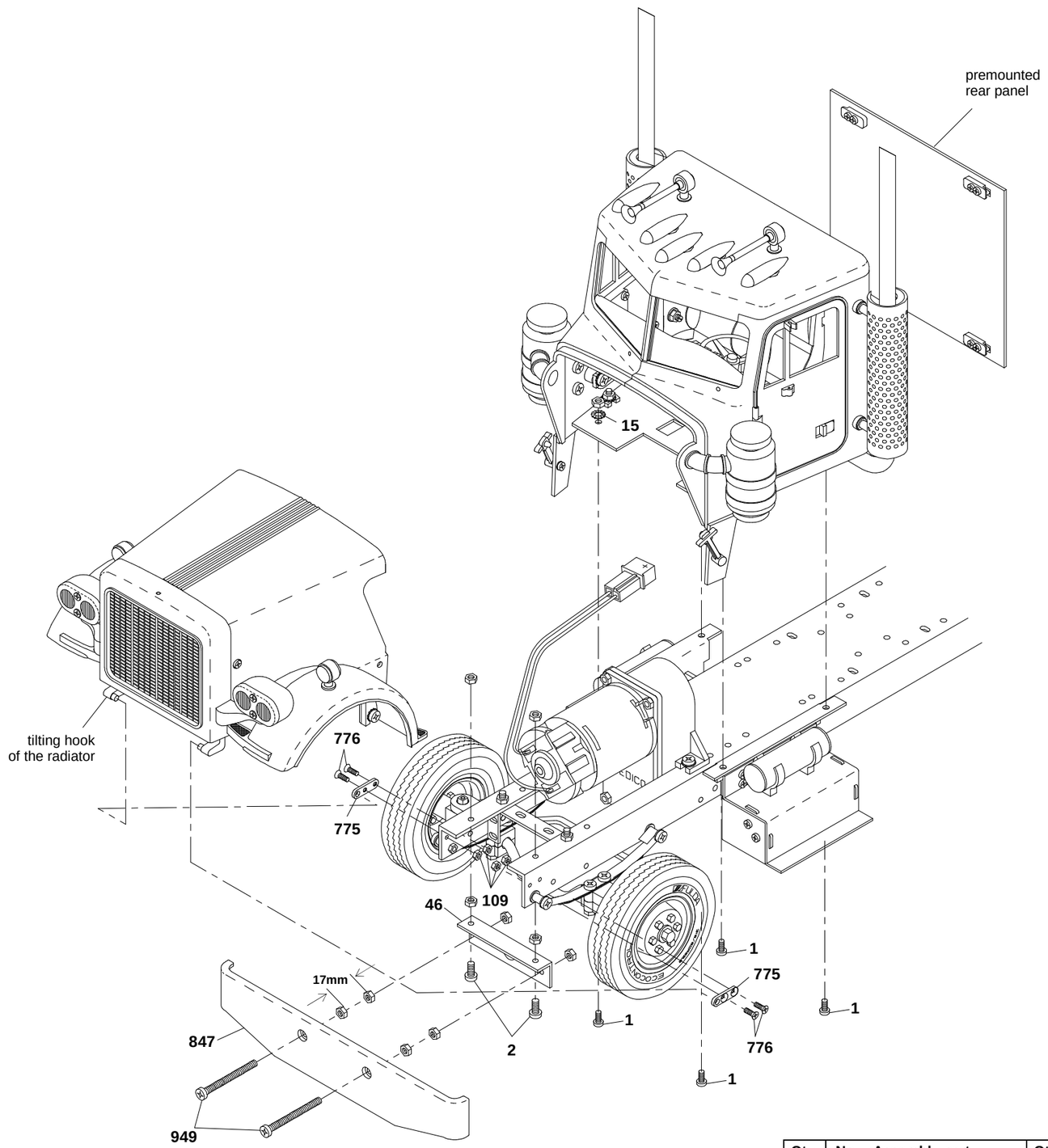


| Qty. | No. | Assembly part | Qty. | No. | Assembly part |
|---|---|---|---|---|---|
| 14 | --- | Nut M3 | 4 | **109** | Nut M2 |
| 4 | **1** | Screw M3 x 6 | 2 | **775** | Support, radiator Peterb. |
| 2 | **2** | Screw M3 x 8 | 4 | **776** | Countersunk screw M2 x 6 |
| 2 | **11** | Screw M3 x 30 | 1 | **847** | Bumper front, chromed |
| 4 | **15** | Serrated washer 3.2 | 2 | **949** | Screw M3 x 35 |
| 1 | **46** | Frame tail piece | | | |

B-41-8

# 18 Attachment of the cab and the hood onto the chassis

## 18.1 Attachment of the cab and the hood

Fix the cab onto both steps with screws **1**, serrated washers **15** and nuts M3. Add the premounted rear panel onto the rear of the cab.

Now use screws **776** and nuts **109** to attach the support for the radiator **775** -at the front on the right side- onto the chassis frame.

Pin then the right hinge pin of the tilting hook on the radiator into the fore hole of the premounted support **775**. Lay now the left support **775** onto the left hinge pin of the tilting hook of the radiator and fix the support with screws **776** and nuts **109** onto the chassis. Tilt the hood towards the front units of the cab and leave the locks (locking device **834**) catching the holes of the hood.

## 18.2 Attachment of the bumper

➔ ***When mounting the Bulbar, Art.-No. 408:*** Replace screws **11** by screws **949** (included with this kit).

Mount first the frame tail piece **46** with two screws **2** and four nuts M3 from underneath onto the frame. Afterwards fix two screws **11** with nuts M3 onto the bumper **847**, and behind, at a distance of 17mm, mount one each additional nut. Using another set of these nuts (each one of them), fix the bumper onto the frame tail piece.

Preparation of the Sleeper tail door **ill. 19**

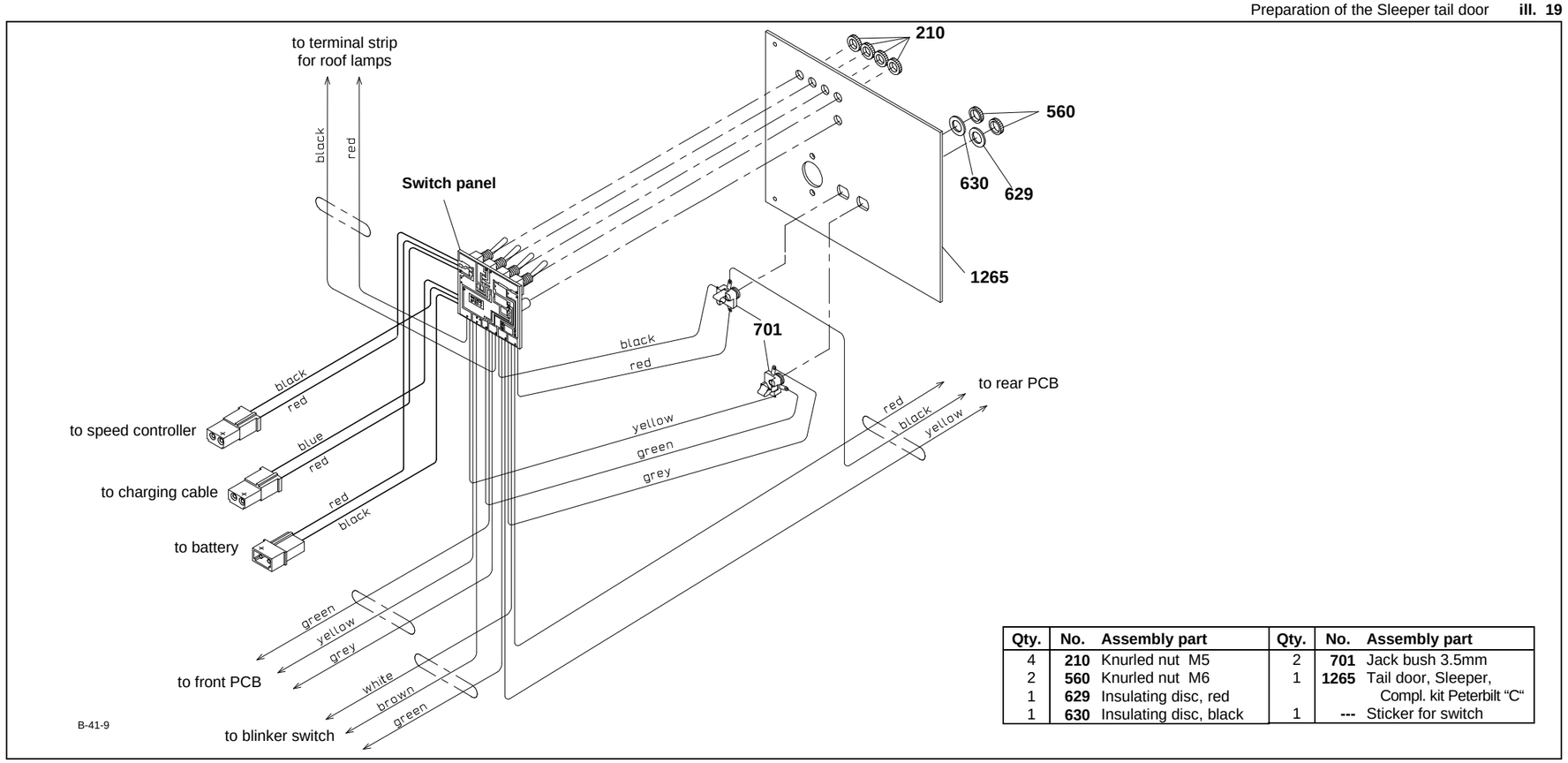


| Qty. | No. | Assembly part | Qty. | No. | Assembly part |
|---|---|---|---|---|---|
| 4 | **210** | Knurled nut M5 | 2 | **701** | Jack bush 3.5mm |
| 2 | **560** | Knurled nut M6 | 1 | **1265** | Tail door, Sleeper, Compl. kit Peterbilt "C" |
| 1 | **629** | Insulating disc, red | | | |
| 1 | **630** | Insulating disc, black | 1 | **---** | Sticker for switch |

Assembly of roof, floor and doors **ill. 20**

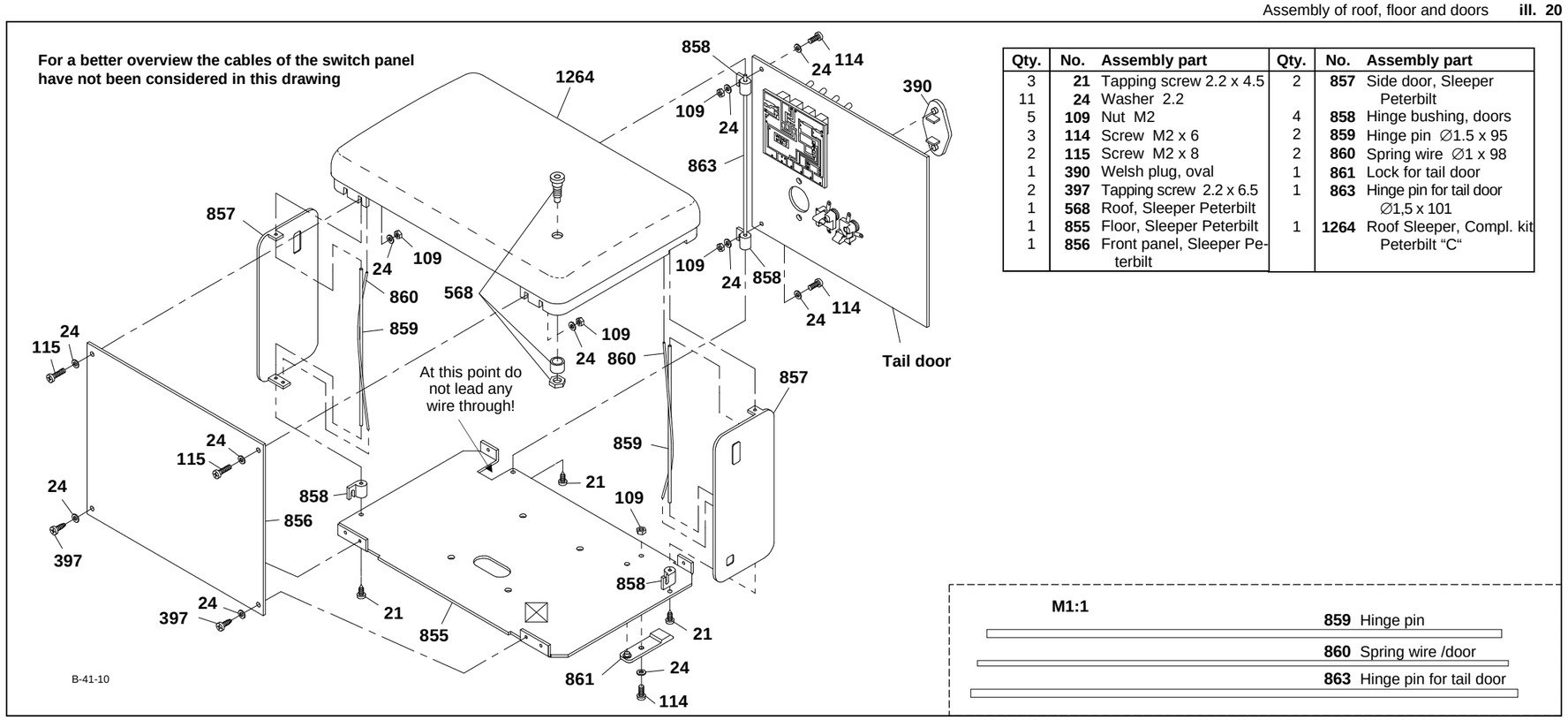


| Qty. | No. | Assembly part | Qty. | No. | Assembly part |
|---|---|---|---|---|---|
| 3 | **21** | Tapping screw 2.2 x 4.5 | 2 | **857** | Side door, Sleeper Peterbilt |
| 11 | **24** | Washer 2.2 | | | |
| 5 | **109** | Nut M2 | 4 | **858** | Hinge bushing, doors |
| 3 | **114** | Screw M2 x 6 | 2 | **859** | Hinge pin ∅1.5 x 95 |
| 2 | **115** | Screw M2 x 8 | 2 | **860** | Spring wire ∅1 x 98 |
| 1 | **390** | Welsh plug, oval | 1 | **861** | Lock for tail door |
| 2 | **397** | Tapping screw 2.2 x 6.5 | 1 | **863** | Hinge pin for tail door ∅1,5 x 101 |
| 1 | **568** | Roof, Sleeper Peterbilt | | | |
| 1 | **855** | Floor, Sleeper Peterbilt | 1 | **1264** | Roof Sleeper, Compl. kit Peterbilt "C" |
| 1 | **856** | Front panel, Sleeper Peterbilt | | | |

## 19 Preparation of the Sleeper tail door

Pin the toggle switches of the switch panel through the holes provided in the tail door **1265**, and secure them from behind with knurled nuts **210**. Clip those jack bushes **701** coming off the PCB into the corresponding holes in the tail door. From behind pin on the insulating discs red **629** and black **630** and secure the unit with knurled nuts **560**. The black insulating disc serves to identify the jack with the two black conductors!

☝ When installing the jack bushes into the tail door make sure that their centre solder eyes are facing outwards.

Finally add the label indicating the switches beneath the toggle switches (please follow ill. 23b).

## 20 Assembly of roof, floor and doors

### 20.1 Antenna socket

Affix the components for the antenna socket **568** as shown in the illustration. Please note that the antenna cable from the remote control receiver will have to be soldered to the antenna socket.

### 20.2 Floor and front panel

Attach the lock **861** for the tail door with screw **114**, washer **24** and nuts **109** from underneath onto the floor **855**. From top add then the hinge bushings **858** onto the floor and fix them from underneath with screws **21**. Now use two screws **397** and washers **24** to mount the front panel **856** onto the floor.

### 20.3 Side doors and roof

Slide each one hinge pin **859** through the holes of the bent hinge strut of the side doors and, accordingly to the illustration, lay one each spring wire **860** around the hinge pins. Thereby insert the lower end of the spring wires into the second hole of the bottom hinge struts.

Take now the right side door and press the upper end of the hinge pin into the outer hole and the upper end of the spring wire into the inner hole of the roof. Fix then the roof with screws **115**, washers **24** and nuts **109** onto the front panel. Thereby you have to insert the lower end of the hinge pin into the hole of the premounted hinge bushing **858**.

Now attach the left side door with the hinge pin and the spring wire by the same way onto the roof and the hinge bushing; for this purpose lightly lift the roof.

### 20.4 Tail door

Now both hinge bushings **858** have to be attached with screws **114**, washers **24** and nuts **109** onto the tail door. Slide the hinge pin **863** through the holes of the hinge bushings. Fix the door thus prepared onto the lower hinge bushing with screw **21** onto the floor and insert the upper end of the hinge pin into the hole of the roof.

| Qty. | No. | Assembly part | Qty. | No. | Assembly part |
|---|---|---|---|---|---|
| 8 | --- | Nut M3 | 4 | **503** | Insulating strip |
| 4 | **10** | Self-cutting screw M3 x 6 | 2 | **802** | Tank cover, chromed |
| 4 | **11** | Screw M3 x 30 | 2 | **804** | Rod for tank, long |
| 16 | **24** | Washer 2.2 | 4 | **805** | Tank support |
| 4 | **54** | Clamp fitting, standard frame | 1 | **806** | Tank tube 95mm |
| 12 | **109** | Nut M2 | 1 | **864** | Side panel, Sleeper Peterbilt |
| 4 | **115** | Screw M2 x 8 | 1 | **1581** | Speed controller, round tank long |
| 2 | **285** | Grabrail, long | | | |
| 4 | **397** | Tapping screw 2.2 x 6.5 | | | |

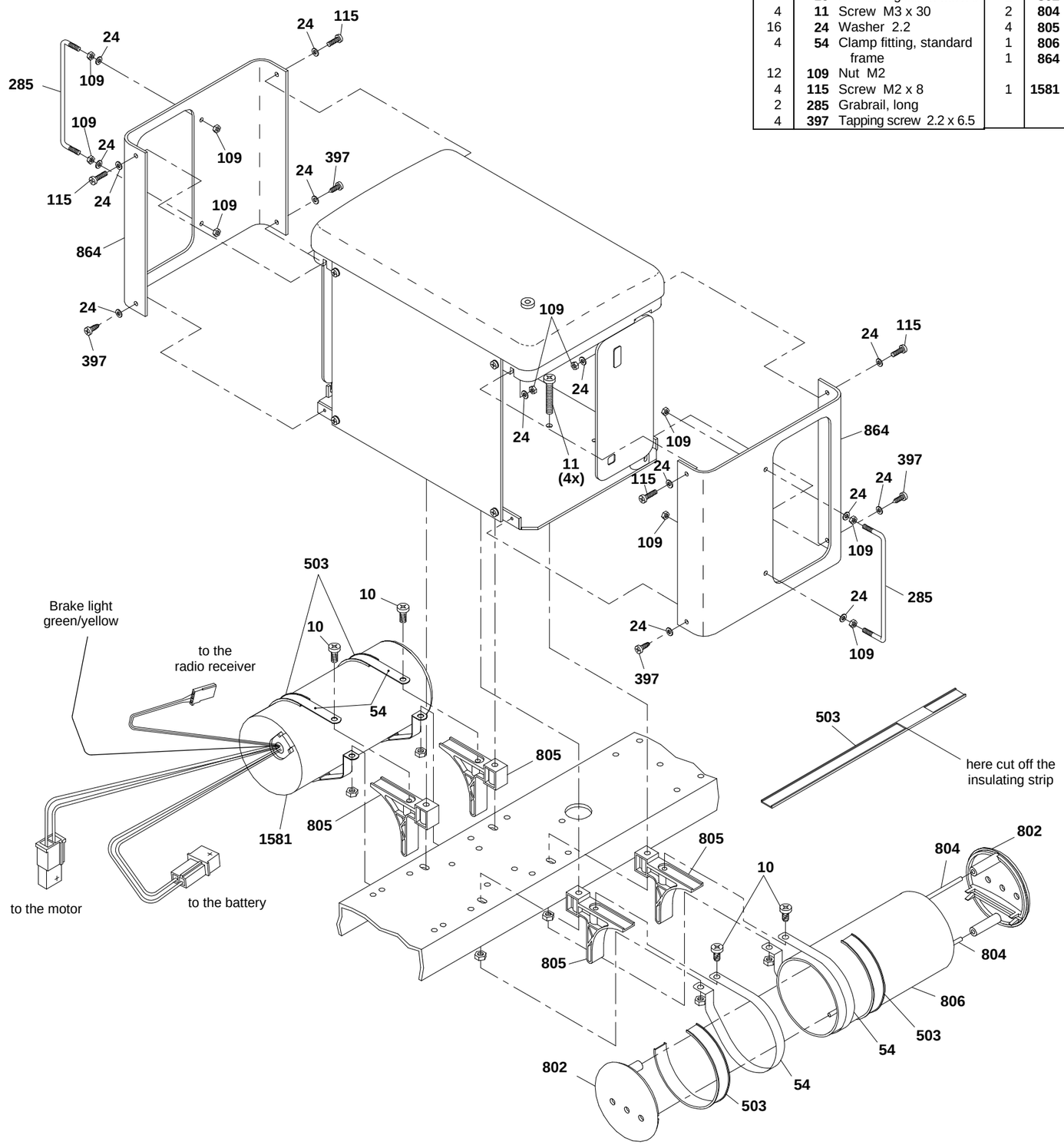


B-41-11

# 21 Mounting of Sleeper, speed controller and tank

### 21.1 Mounting the Sleeper

Use nuts **109** and washers **24** to add both grabrails **285** onto the side panels **864**. Now slide the side panels onto the already premounted assembly group of roof, floor and doors and fix them with screws **397** and washers **24** onto the floor, and with screws **115**, washers **24** and nuts **109** onto the roof.

Fasten both clamp fittings **54** with screws **10** onto two tank supports **805**. Insert four screws **11** through the holes of the Sleeper floor and slide the four tank supports **805** from underneath onto the screws. Set the Sleeper unit onto the chassis (please see as well instructions for the proper chassis) and fix the screws from underneath onto the frame using nuts M3.

### 21.2 Assembling the tank

Press the rods **804** into the bushings of one tank cover **802**. Slide then the tank cover into the tank tube **806** and press the second tank cover onto the rods and into the tank tube.

### 21.3 Attachment of tank and speed controller

In order to add the tank, respect. the speed controller **1581** to it's supports, cut the insulating strips **503** at that point marked in the illustration. Lay these strips with the clamp fittings around the tank and fix them from underneath with nuts M3 onto the screws **11**.

**NOTE:** Instead of the tank, to the left frame side you perfectly may add an Electronic Original Diesel Engine Sound, Art.-No. 193.

| Qty. | No. | Assembly part | Qty. | No. | Assembly part |
|---|---|---|---|---|---|
| 1 | **228** | Windscreen wiper -lh- | 1 | **718** | Antenna with ball |
| 1 | **228** | Windscreen wiper -rh- | 1 | **842** | Wing Peterbilt, chromed |
| 2 | **281** | Mirror, chromed | 1 | **851** | Sun visor Peterbilt |
| 2 | **655** | Adhesive pad, double-sided | 2 | **852** | Mirror support |

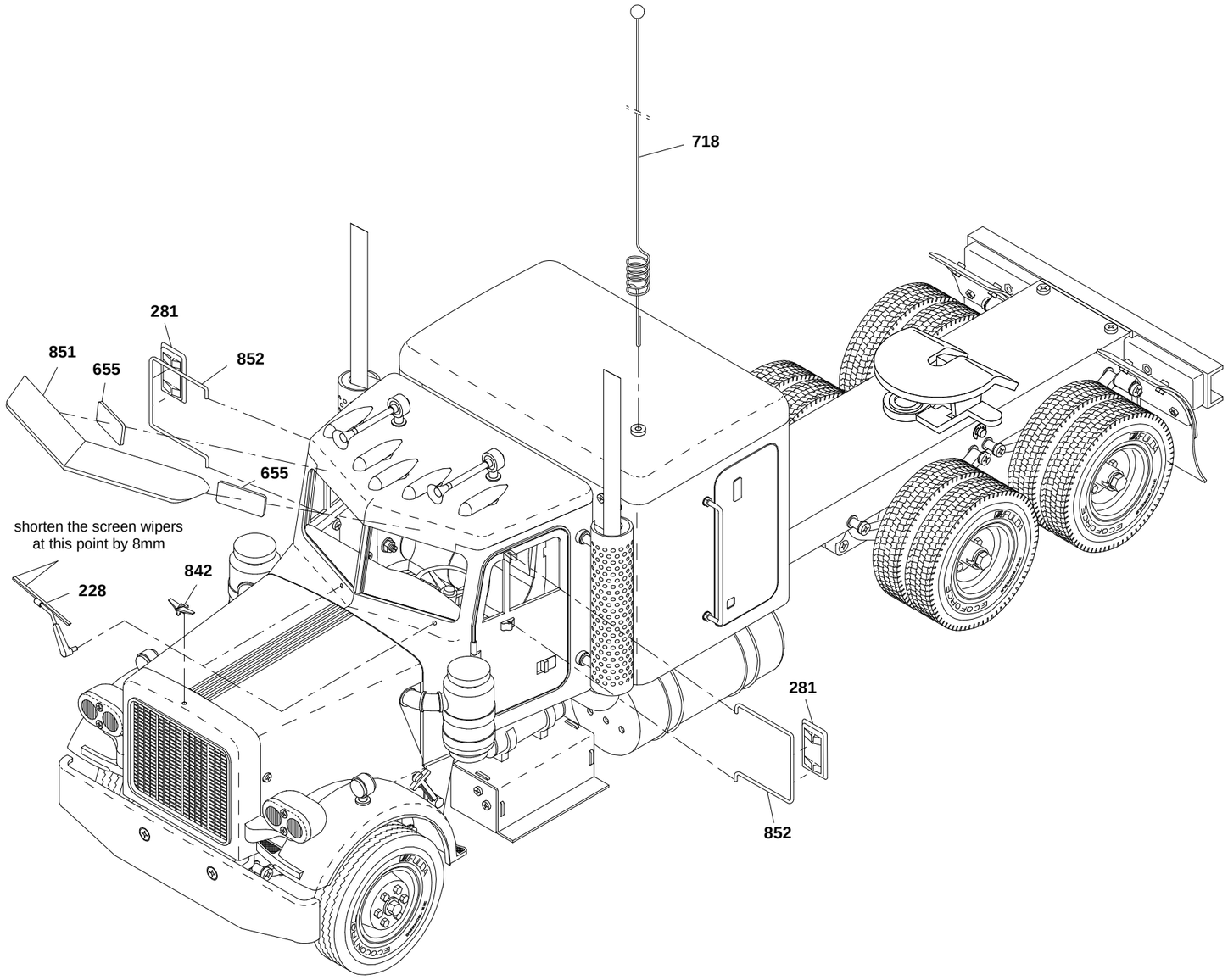


B-41-12

## 22 Attaching the small exterior components

Press the mirrors **281** onto the mirror supports **852** and fix the supports onto the doors.

The windscreen wipers **228** (already cut to length accordingly to the drawing) are now pressed into the holes of the front parts.

Add the sun visor **851** with two double-sided adhesive tapes onto the top of the front units

Cut the label "Peterbilt" off from the decal sheet **841** and glue it onto the radiator; into the hole therefore provided press now the wing **842**.

Insert the antenna **718** into the antenna socket after sliding the ball onto the tip of the antenna.

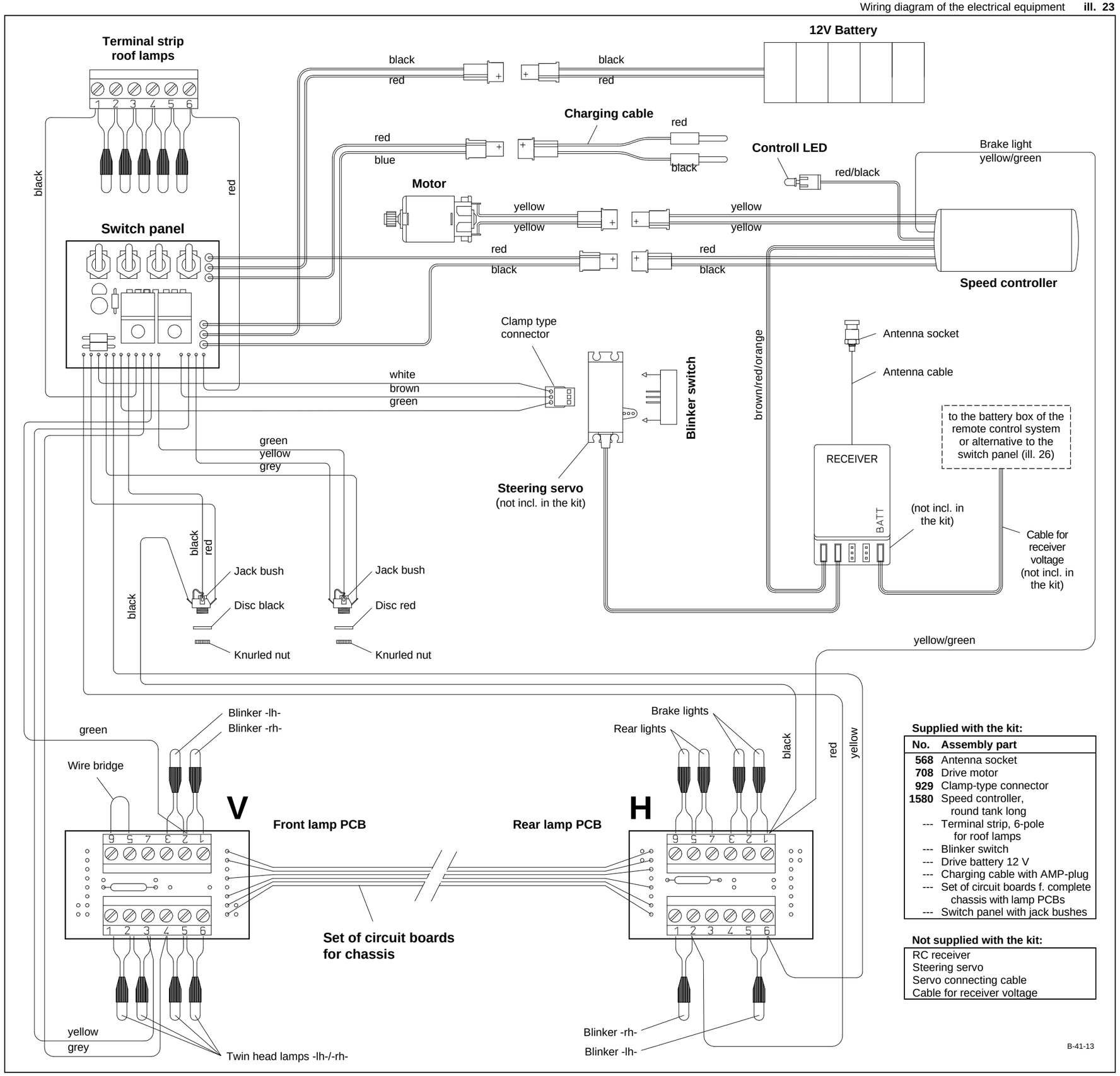


**Supplied with the kit:**

| No. | Assembly part |
|---|---|
| **568** | Antenna socket |
| **708** | Drive motor |
| **929** | Clamp-type connector |
| **1580** | Speed controller, round tank long |
| --- | Terminal strip, 6-pole for roof lamps |
| --- | Blinker switch |
| --- | Drive battery 12 V |
| --- | Charging cable with AMP-plug |
| --- | Set of circuit boards f. complete chassis with lamp PCBs |
| --- | Switch panel with jack bushes |

**Not supplied with the kit:**

RC receiver
Steering servo
Servo connecting cable
Cable for receiver voltage



# 23 The electrical system

The wiring diagram shows the cable connections for the individual electrical components

### 23.1 Mounting the switching panel and lamp PCBs

The switch panel is inserted into the tail door of the Sleeper as described in Section 19. First connect the bulbs and cables and then clip the lamp PCBs in place at the front and rear in the supports provided for this purpose.

### 23.2 Information on the bulbs, troubleshooting

All the bulbs are 3-volt bulbs connected in series. This means that the conductors are not each connected to the supply voltage, as in an automobile. Instead, the ends are joined one to another to form a chain and the ends of the chain are attached to the power supply. Consequently just a single defective bulb will interrupt the entire circuit and none of the lamps in the chain will light. The best way to locate the defective bulb is to use a cable to bypass each of the bulbs in the series, one after the other. When you bypass the defective bulb, the rest in the chain will light. The reason for using a series circuit, which may appear to be complicated, is the low power consumption. 3-volt bulbs use far less power than 12-volt bulbs in relation to their brightness. The power consumed by a chain of up to five 3-volt bulbs is just 0.1 A in the series connection which we use; 12-volt bulbs, by comparison, would draw 0.3 A.

### 23.3 Wiring the roof lamps

The bulb leads and the red and black cables from the switch panel are attached at the screw terminal strip for the roof lamps. Then attach the terminal strip under the roof as described in Section 6.

☝ Be careful when clipping off the solder pins at the terminal strip as there is a danger of shorts!

### 23.4 Wiring at the rear lamp PCB (tail and brake lights, rear blinkers)

The red/black/yellow cable exiting the switch panel for the rear lamps is routed under the frame and to the rear and connected to the PCB - marked on the bottom with „H“ for rear - as shown in the illustration. The green/yellow brake light cable coming from the speed controller is also to be connected at this PCB. Once the bulb leads have been attached, the PCB is clipped in place at the support which was previously affixed with adhesive pads.

**Explanation:** The green/yellow brake light cable connects the brake light bulbs to ground when the vehicle is at a standstill. This circuitry incorporates an element which limits the current to 750 mA and will disable the circuit in case of an overload or short. Switching off the supply voltage for about one second will reset this element, provided that the reason for the malfunction has been corrected.

### 23.5 Wiring at the front lamp PCB (twin headlamps, front blinkers)

The green/yellow/grey cable serving the lamps at the front also exits from the switch panel and is routed below the frame and to the front in exactly the same fashion. After connecting to the PCB - marked on the bottom with „V“ for front - and connecting the bulb leads, the lamp PCB is clipped in place in the support previously mounted.

### 23.6 Wiring the blinker switch

The green/brown/white cable for the blinker switch terminates in a clamp-type connector (see therefore ill. 23a on page 14). This connector is attached to the blinker switch (if the direction of travel does not correspond to the blinking, please rotate it through 180°) mounted beneath the steering servo, already illustrated in ill. 16.

### 23.7 Connecting the speed controller

Connect the AMP socket with the yellow cables to the corresponding AMP plug at the drive motor, and the AMP plug with the red/black cables to the AMP socket at the switch panel.

The connection of the green/yellow brake light cable has already been described in Section 23.4. The signal "brake light" is switched by minus line, and it is time-triggered: As soon as one changes the position of the control lever from either "forward" or from "reverse" to the neutral position (switched-off), the brake light starts lighting for approx. eight seconds. But as soon as the travelling operation is started again, the brake light stops automatically its blinking, even before having finished these eight seconds.

Attach the connecting socket with the brown/red/orange cable to one of the receiver terminals. If the socket doesn't match the receiver, you will need to add an adapter cable (not making part of this kit).

### 23.8 Starting the electrical system (see switches, ill. 23b)

The electrical system is put into operation by turning on the main switch; the LED blinks. Then the transmitter and receiver are switched on, in this order. (Always switch off the receiver first and then the transmitter!) If a speed controller has been installed, the brake lights will go on. If the light switch is on, the headlamps, the roof lamps and the tail lamps will light.

## 24 The speed controller

The WEDICO speed controller is matched to the WEDICO-Bühler motor. The electronics are permanently installed in a tank housing, which should never be opened! Never apply force as this could damage the speed controller and nullify any and all guarantee entitlements. Prior to its supply, each speed controller is individually tested and provided with a basic programming. In your particular case, probably this general basic programming may not be the optimal for the type of RC equipment you are using, but you of course may change it (for further details please refer to the section 24.2 "programming").

### 24.1 Starting the speed controller

Switch the electrics on by the following sequence: start by the main switch of the Electr. System, then switch on the transmitter, and finally the receiver; keep your eye on the control LED. Before you make the motor starts working remote-controlled, it is the speed controller which has first to detect the programmed neutral position; this position sits approx. in the centre on the control lever of your transmitter unit. Once the speed controller has correctly detected said position, as a confirmation the control LED starts blinking for a ten times term. Only then one may consider the speed controller as in state of readiness; and now the motor power can be controlled for both senses of direction via the control lever.

### 24.2 How to programme the speed controller

Continue paying your attention to the control LED. For the correct adjustment of the control lever on the transmitter, set the shift controller in neutral position; slide then the control lever into that position at which you wish the motor to be "off". As a confirmation, lightly press the programming key "4" on the speed controller (refer to next paragraph). Do not move the control lever on the transmitter. Now, the speed controller detects the neutral position, and the control LED starts its ten times blinking.

Immediately after the blinking activity has started, slide the control lever into the position for maximum "forward" speed; secure the lever at this point. Do not move it. Even after the 10th blinking, the control LED remains dark. As soon as the transmitter of your RC equipment has detected the pulse corresponding to the maximum speed, the control LED starts blinking again for a ten times term.

Immediately after the start of this blinking activity move the control lever from the position "forward" directly to the position provided for maximum "reverse" speed; secure the lever at this position. Again, after the 10th blinking the control LED remains dark. Once the transmitter of the RC unit has detected that pulse responsible for the maximum speed, the control LED starts blinking again.

This signifies that the programming procedure of the speed controller has been completed. The transmitter of the RC unit has successfully detected the pulse coming from the speed controller, and now the complete system is ready to operate.

If an error has been made during the programming procedure, the system will not accept the new figures. In this case switch your Electrical System off just for a short moment, and then switch it on again; this procedure will re-activate the previous version of the programming you have chosen for your speed controller. At this stage you may start again any new programming.

### 24.3 Options for adjusting the speed controller

The holes at the rear tank cover are identified by numbers and serve for the following types of adjustments, as there are:

- to "3": By a potentiometer, adjustment of the maximum motor speed from 50 to 100% for the 1st direction (either forward or reverse, see below),
- to "4": By key initiating the programming procedure,
- to "5": By potentiometer, adjustment of the maximum motor speed from 50 to 100% for the 2nd direction (either forward or reverse, see below).

It is by testing only that you find out which of both holes, either "3" or "5", is responsible for the maximum motor speed of the direction “forward” resp. the direction “REVERSE”.

Standard values on the speed controller are adjusted by manufacturers. For any alteration of adjustment use a small screwdriver. Be careful and don't apply any force!

### 24.4 Troubleshooting

| | |
|---|---|
| No blinking activity on the speed controller after having put into operation | The position of the shifting lever provided for the adjustments does not correspond to the position of the programming procedure. Make sure the shifting lever has been set to neutral position! |
| Motor does not react at all | Inadequate wire connections; receiver voltage below 3 V; main NiCads too low (below 8 V) |

## 25 Charging the drive battery

For charging the drive battery connect as follows:

- the AMP-plug of the charging cable to that AMP-socket with the blue/red cable of the cab's switch panel,
- the banana plugs of the charging cable to a charging unit.

☝ **Warning:** Ensure that the banana plugs for the charging cable do not touch while the charging cable is connected to the switch panel.

At normal discharge levels it will take about 12 to 14 hours to recharge the battery (at 150 mA). Quick charging should be used only in exceptional cases at a maximum of 1.5 A for one hour.

## 26 The remote control system

To operate the speed controller and the steering servo an inexpensive 2/4 channel system will be sufficient. Should you intend installing additional electrical accessories, such as e.g. Diesel Engine Sound, Art.-No. 189, for an RC equipment we would recommend a 2/4 channel unit, offering the installation of retrofit sets for the operation of switching functions. Please ask your dealer for advice. Follow the instructions provided by the RC system manufacturer when installing the receiver unit.

Should you don't wish the receiver voltage of your radio unit being supplied via an independent battery, you may connect it to your 12V truck battery. For this purpose you have to solder the wires of the receiver battery onto the switch panel (see ill. 26).

**Note:** By the installed voltage regulator (as a series fitting) the battery voltage of 12V on the switch panel is now automatically being reduced to 5 volts.

## 27 Supplementary information

**Attention:** This special electrical equipment making part of our production line "Complete Kits" will not fit any other electrical accessory offered within the range of WEDICO System-Kits.

Should you once wish to extend your "Complete Kit" by one or the other electric accessory you will have to exchange this electrical system. WEDICO offers you the following Electrical Systems:

- Art.-No. 782: The information to the semi-trailer is transmitted via a multi-frequency system. When adding an Infrared System (Art.-Nr. 790 as transmitter, and Art.-No. 791 as receiver), you may drive your prime mover with any of a semi-trailer - it does not depend on the type of Electrical System your truck is equipped with.
- Art.-No. 796: The information is serially transmitted via one data line only inside the prime mover. The information to the semi-trailer is transmitted via an Infrared Diode (transmitter).

Except these electrical components, all other accessories (for standard chassis) being offered within our programme WEDICO System-Kits will fit your truck and/or semi-trailer and may be installed.

At electrical connections, please make sure that **soldering points are clean** and **plug connectors are properly cramped!**
Loose plugs and loosely twisted wire connections cause faults which are often hardly to locate.

Attachment of the clamp-type connector **ill. 23a**

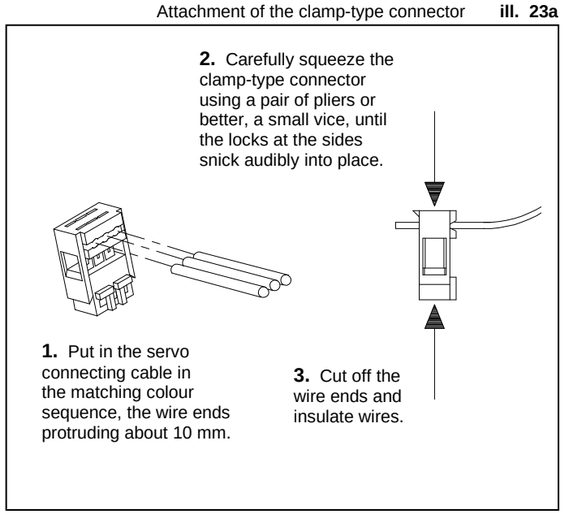


Switches of the switch panel **ill. 23b**

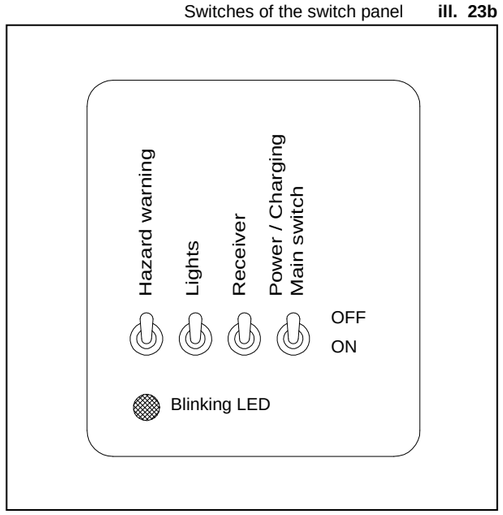


Charging the batteries **ill. 25**

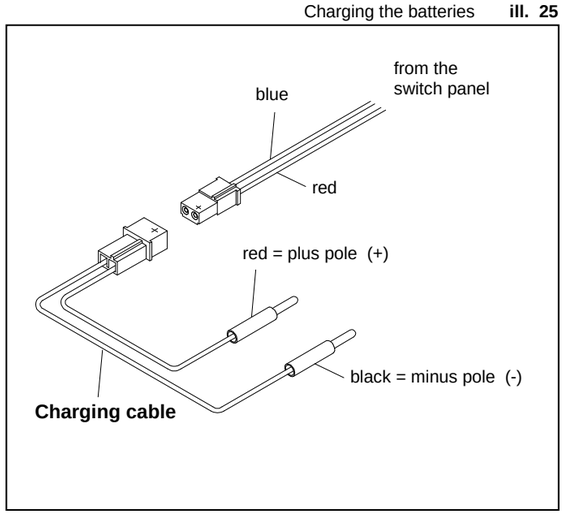


Solder points for the connection of 5V receiver voltage **ill. 26**

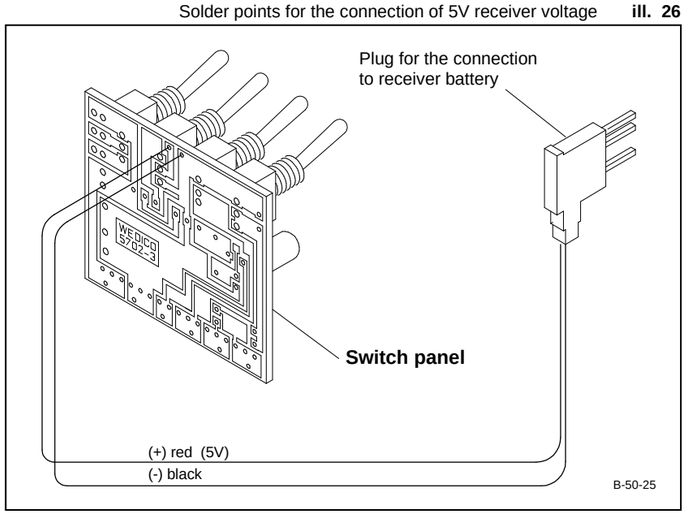

## 28 General parts list

For gaining an easier overview of all single components and their necessary quantity for the correct assembly of this model, on the left side of this page you find a complete list including each single item. For reasons of packaging some of the small parts are packed in a higher number of pieces than necessary. On the left side you find the quantity mentioned for each part. Next to this column you find the numbers of the assembly parts and their terms, followed by the EDP-numbers to be used when re-ordering one or the other item.

***Complete list of parts necessary for the assembly*** *(please use EDP-number when ordering spare parts)*

| Qty. | No. | Assembly part | EDP-No. |
|---|---|---|---|
| 90 | --- | Nut M3 | 20040 |
| 14 | 1 | Screw M3 x 6 | 20016 |
| 28 | 2 | Screw M3 x 8 | 20018 |
| 14 | 3 | Screw M3 x 12 | 20022 |
| 10 | 4 | Screw M3 x 16 | 20024 |
| 8 | 5 | Screw M3 x 20 | 20224 |
| 2 | 6 | Screw M3 x 25 | 20026 |
| 8 | 10 | Self-cutting screw M3 x 6 | 20222 |
| 6 | 11 | Screw M3 x 30 | 21690 |
| 8 | 12 | Square nut M3 | 20044 |
| 48 | 13 | Washer 3.2 | 20046 |
| 34 | 15 | Serrated washer 3.2 | 20054 |
| 4 | 16 | Stud bolt M3 x 18 | 20258 |
| 4 | 17 | Hex head screw M4 x 8 | 20036 |
| 2 | 18 | Hex head screw M4 x 25 | 20038 |
| 7 | 19 | Nut M4 | 20042 |
| 8 | 20 | Washer 4.3 | 20048 |
| 26 | 21 | Tapping screw 2.2 x 4.5 | 20052 |
| 31 | 24 | Washer 2.2 | 21210 |
| 2 | 25 | Retaining washer 3.2 | 20058 |
| 22 | 26 | Bushing 4 x 0.5 x 7 | 20088 |
| 2 | 27 | Axle tube | 20150 |
| 2 | 29 | Ball bolt M3 | 20170 |
| 3 | 30 | Ball socket | 20172 |
| 6 | 32 | Spring long, “AF“ | 20132 |
| 8 | 33 | Spring medium, “AF“ | 20134 |
| 6 | 34 | Spring short, “AF“ | 20136 |
| 2 | 36 | Threaded rod M2 x 50 | 20268 |
| 4 | 41 | Half-axle guard | 20144 |
| 2 | 42 | Steering lever | 20146 |
| 1 | 44 | Link lever | 20148 |
| 2 | 46 | Frame tail piece | 20002 |
| 1 | 47 | Bumper, rear | 20006 |
| 4 | 52 | Rim, grey | 20128 |
| 6 | 52 | Rim, chromed | 20420 |
| 2 | 53 | Standard tyre “Ecocontrol“ | 28840 |
| 4 | 54 | Clamp fitting, standard frame | 20124 |
| 1 | 55 | Front axle | 20142 |
| 1 | 56 | Steering wheel | 20156 |
| 4 | 57 | Screw M3 x 10 | 20020 |
| 1 | 58 | Case for gear 116 | 20318 |
| 1 | 59 | Cap for gear 116 | 20320 |
| (1) | 60 | Motor pinion, white, 14teeth | 20300 |
| 1 | 61 | Double pinion for gear 116 | 20324 |
| 1 | 62 | Gear wheel with joint socket | 20326 |
| 1 | 63 | Shaft 5 x 24 for gear 116 | 20330 |
| 2 | 64 | Ball joint | 20328 |
| 1 | 66 | Standard differential, mounted | 21234 |
| 1 | 68 | Rear axle 144mm | 20126 |
| 4 | 70 | Spring carrier, plastic | 20138 |
| 1 | 71 | Standard fifthwheel | 20008 |
| 1 | 72 | Bar for kingpin | 20010 |
| 1 | 73 | Shaft for fifthwheel | 20012 |
| 1 | 74 | Draw spring | 20462 |
| 1 | 91 | Radiator grille Conv. Truck | 20108 |
| 2 | 93 | Muffler 80mm | 20074 |
| 2 | 95 | Exhaust tail pipe | 20078 |
| 4 | 96 | Exhaust cap | 20079 |
| 32 | 109 | Nut M2 | 21208 |
| 4 | 111 | Self-cutting screw M3 x 8 | 20223 |

| Qty. | No. | Assembly part | EDP-No. |
|---|---|---|---|
| 25 | 114 | Screw M2 x 6 | 21268 |
| 8 | 115 | Screw M2 x 8 | 21269 |
| 6 | 210 | Knurled nut M5 | 20440 |
| 1 | 228 | Windscreen wiper -lh- | 21972 |
| 1 | 228 | Windscreen wiper -rh- | 21974 |
| 2 | 281 | Mirror, chromed | 20358 |
| 2 | 282 | Fixing clip | 20360 |
| 2 | 285 | Grabrail, long | 22456 |
| 5 | 289 | Lens for roof lamp, orange | 20404 |
| 2 | 291 | Headlight lens, Freightliner | 22479 |
| 2 | 341 | Blinker lens high, orange | 20304 |
| 4 | 342 | Lens/rear light high, red | 20308 |
| 4 | 355 | Countersunk screw M3 x 8 | 20030 |
| 2 | 368 | Case for air tank | 21538 |
| 4 | 369 | Bridging clamp for air tank | 21544 |
| 4 | 370 | Cover for air tank | 21540 |
| 2 | 372 | Exhaust shield, chromed | 20356 |
| 4 | 383 | Fixing cap for exhaust shield | 20426 |
| 1 | 390 | Welsh plug, oval | 20292 |
| 1 | 391 | Shim 5 x 10 x 1 | 23346 |
| 8 | 397 | Tapping screw 2.2 x 6.5 | 23690 |
| 2 | 469 | Lock guide, door | 24304 |
| 2 | 470 | Mirror hinge, bottom | 24292 |
| 2 | 472 | Door lock | 24288 |
| 2 | 483 | Exhaust manifold | 21202 |
| 1 | 498 | Switch dashboard | 24714 |
| 4 | 503 | Insulating strip | 20296 |
| 2 | 560 | Knurled nut M6 | --- |
| 4 | 564 | Countersunk tapping screw 2.2 x 4.5 | 25072 |
| 1 | 568 | Antenna socket, complete | 20430 |
| 1 | 629 | Insulating disc, red | 26230 |
| 1 | 630 | Insulating disc, black | 26232 |
| 7 | 655 | Adhesive pad, double-sided | 20410 |
| 2 | 701 | Jack bush 3.5mm | 26076 |
| 5 | 706 | Roof lamp, chromed | 20352 |
| 2 | 707 | Horn | 20350 |
| 1 | 708 | Bühler motor including 14 teeth pinion | 22298 |
| 2 | 709 | Lamp cap | 20264 |
| 1 | 710 | Carrier plate for support PCB | 23334 |
| 2 | 711 | Blinker case Conv. Truck | 20372 |
| 4 | 712 | Blinker lens flat, orange | 20302 |
| 17 | 713 | Bulb 3V | 20310 |
| 2 | 714 | Mud guard | 21272 |
| 1 | 715 | Mudguard support “X“ | 21275 |
| 1 | 716 | Mudguard support “O““ | 21274 |
| 2 | 717 | Mud flap | 24074 |
| 1 | 718 | Antenna with ball | 20432 |
| 1 | 719 | Cover for blinker switch | 24920 |
| 1 | 720 | Base for blinker switch | 24916 |
| 2 | 721 | Spring, single bent | 25066 |
| 1 | 722 | Spring, double bent | 25068 |
| 2 | 723 | PCB support, small | 21530 |
| 1 | 724 | Lever for blinker switch | 24918 |
| 2 | 728 | Back, bucket seat | 26032 |
| 2 | 729 | Socket, bucket seat | 26030 |
| 2 | 730 | Foot, bucket seat | 26034 |
| 8 | 742 | Screw M2 x 5 | 26238 |
| 1 | 760 | Servo angle 1, small | 26122 |

| Qty. | No. | Assembly part | EDP-No. |
|---|---|---|---|
| 2 | 775 | Support, radiator Peterbilt | 25908 |
| 4 | 776 | Countersunk screw M2 x 6 | 26248 |
| 1 | 789 | Fork head | 20400 |
| 2 | 802 | Tank cover, chromed | 26041 |
| 2 | 804 | Rod for tank, long | 26414 |
| 4 | 805 | Tank support | 25830 |
| 1 | 806 | Tank tube 95mm, polished | 26046 |
| 1 | 808 | Frame “XL“, 590mm | 26406 |
| 2 | 811 | Headlight frame, chromed | 26413 |
| 1 | 812 | Headlight -lh-, chromed | 25965 |
| 1 | 813 | Headlight -rh-, chromed | 25967 |
| 1 | 814 | Radiator Peterbilt, polished | 26512 |
| 2 | 815 | Locking plate, radiator | 25954 |
| 2 | 816 | Wedge washer, radiator | 26022 |
| 1 | 817 | Fender -lh-, Peterbilt: | |
| | | white | 26374 |
| | | black | 26394 |
| | | green | 26402 |
| 1 | 818 | Fender -rh-, Peterbilt: | |
| | | white | 26372 |
| | | black | 26392 |
| | | green | 26404 |
| 1 | 819 | Hood Peterbilt: | |
| | | white | 26494 |
| | | black | 26498 |
| | | green | 26500 |
| 1 | 820 | Door -lh-, Peterbilt: | |
| | | white | 26524 |
| | | black | 26528 |
| | | green | 26530 |
| 1 | 821 | Door -rh-, Peterbilt: | |
| | | white | 26532 |
| | | black | 26536 |
| | | green | 26538 |
| 2 | 822 | Inside door coating | 25974 |
| 2 | 823 | Door hinge 1 | 25976 |
| 2 | 824 | Door hinge 2 | 26018 |
| 2 | 825 | Door hinge, top | 25978 |
| 2 | 826 | Door hinge, bottom | 26020 |
| 22 | 827 | Pin for door hinge ∅1 x 36mm | 25980 |
| 2 | 828 | Side window | 25996 |
| 1 | 829 | Front panel -lh-, Peterbilt: | |
| | | white | 26370 |
| | | black | 26390 |
| | | green | 26398 |
| 1 | 830 | Front panel -rh-, Peterbilt: | |
| | | white | 26368 |
| | | black | 26388 |
| | | green | 26400 |
| 1 | 831 | Air filter -lh-, Peterbilt | 26009 |
| 1 | 832 | Air filter -rh-, Peterbilt | 26008 |
| 2 | 833 | Air tube | 26010 |
| 2 | 834 | Locking device for hood | 25958 |
| 1 | 835 | Floor plate, Peterbilt | 25990 |
| 1 | 838 | Centre strut, windscreen | 25916 |
| 2 | 839 | Windscreen (half) | 25992 |
| 1 | 840 | Dashboard Peterbilt | 25914 |
| 1 | 841 | Decal sheet, Peterbilt | 25952 |
| 1 | 842 | Wing Peterbilt, chromed | 26549 |
| 8 | 843 | Threaded bushing M2 x 8 | 26472 |

| Qty. | No. | Assembly part | EDP-No. |
|---|---|---|---|
| 2 | 844 | Stepboard Peterbilt | 25994 |
| 2 | 845 | Stepboard plate | 25998 |
| 8 | 846 | Connection stepboard plate | 26006 |
| 1 | 847 | Bumper front, chromed | 25987 |
| 1 | 848 | Rear panel, Peterbilt | |
| | | white | 26430 |
| | | black | 26434 |
| | | green | 26436 |
| 4 | 849 | Bar (outside), rear panel | 25982 |
| 4 | 850 | Bar (inside), rear panel | 25984 |
| 1 | 851 | Sun visor | 25969 |
| 2 | 852 | Mirror support | 26038 |
| 1 | 853 | Spring for speaker ∅1 x 73 | 26024 |
| 1 | 855 | Floor, Sleeper Peterbilt | 25860 |
| 1 | 856 | Front panel, Sleeper Peterbilt: | |
| | | white | 26454 |
| | | black | 26458 |
| | | green | 26460 |
| 2 | 857 | Side door, Sleeper Peterbilt: | |
| | | white | 26462 |
| | | black | 26466 |
| | | green | 26468 |
| 4 | 858 | Hinge bushing, doors | 25872 |
| 2 | 859 | Hinge pin ∅1.5 x 95 | 25866 |
| 2 | 860 | Spring wire ∅1 x 98 | 26416 |
| 1 | 861 | Lock for tail door | 25874 |
| 1 | 863 | Hinge pin for tail door ∅1,5 x 101 | 26026 |
| 2 | 864 | Side panel, Sleeper Peterbilt: | |
| | | white | 26438 |
| | | black | 26442 |
| | | green | 26444 |
| 2 | 908 | Stopmutter M3 | 30568 |
| 1 | 929 | Clamp-type connector, 3-pole | 21772 |
| 2 | 949 | Screw M3 x 35 | 21844 |
| 1 | 1048 | Drive shaft 300mm | 26474 |
| 8 | 1160 | Drive axle tyre “Ecoforce“ | 28172 |
| 1 | 1263 | Cab roof, Complete Kit Peterbilt “C“: | |
| | | white | 28696 |
| | | black | 28698 |
| | | green | 28700 |
| 1 | 1264 | Roof Sleeper, Complete Kit Peterbilt “C“: | |
| | | white | 28702 |
| | | black | 28704 |
| | | green | 28706 |
| 1 | 1265 | Tail door, Sleeper, Complete Kit Peterbilt “C“: | |
| | | white | 28708 |
| | | black | 28710 |
| | | green | 28712 |
| 1 | 1390 | Track rod, flat | 29312 |
| 1 | 1581 | Speed controller, round tank long | 29766 |
| 1 | --- | Sticker for switch | 20558 |
| 1 | --- | Drive battery 12V | 21441 |
| 1 | --- | Terminal strip, 6-pole | 21878 |
| 1 | --- | Charging cable with AMP-plug | 25946 |
| 1 | --- | Switch panel with jack bushes | 26068 |
| 1 | --- | Set of circuit boards for complete chassis | 26072 |